TREMCO
Construction Products Group

TremLock® K-Zip Installation Guideline

Date 09/2026

Introduction

This TremLock® K-Zip Installation Guideline provides the company with the "Installation Instructions" required by the building regulations for installing the profiled sheets. It provides information, general notes and explanations, as well as detailed instructions for installing TremLock K-Zip aluminum roof and wall systems.

The present Guideline provides a basis for the correct, professional installation of TremLock K-Zip profiled sheets. It deals with the usual cases of processing and use. Supplementary guidelines are available for special applications (see tremcoroofing.com).

The applicable building authorities regulations, standards, accident prevention regulations, rules for health and safety and other similar guidelines should be taken into account along with the guidelines presented here.

The images and processing descriptions included here represent the present state of the technology. They do not take into account any specific application. We reserve the right to make technically appropriate modifications to the designs or installation procedures for the sake of our high quality standards and of progress. Due to the dynamism of product developments and improvements, the TremLock K-Zip printed documents do not always correspond to the actual products. The currently valid version of the Installation Guideline can be downloaded at tremcoroofing.com.

In the event of disagreement between those responsible for the construction, this Guideline shall be the standard for the correct and professional method for installing TremLock K-Zip.

The fact that this Guideline has been released does not obviate the personal responsibility of those concerned for their actions. Moreover, Tremco CPG cannot accept liability for any errors that this Guideline may contain. In light of present knowledge it does nevertheless ensure correct technical performance. Compensation claims cannot be based on its application.

Metric and US Customary System conversions

In this manual, metric dimensions are the governing and most precise measurements. USCS values (inches or feet) are provided as the closest practical fractional equivalents for convenience. For exact dimensions, refer to the metric measurements.

May 2026

Copyright Tremco CPG Inc.

Overview of contents

Introduction 1.0

The System 2.0

Transport · Storage · Inspection 3.0

Clip installation 4.0

Installing TremLock K-Zip · renovating with TremLock K-Zip 5.0

Connections 6.0

Installations 7.0

Welding · cutting · bending 8.0

Useful hints and advice 9.0

Special tools 10.0

System components and accessories 11.0

Contents

Overview

		Page
1.0	**Introduction**	
1.0	Introduction	8
2.0	**The System**	
2.0	The System	9
2.1	TremLock K-Zip range of applications	10
2.1.1	TremLock K-Zip non-ventilated roof on trapezoidal steel deck	11
2.1.2	TremLock K-Zip non-ventilated roof on purlin with trapezoidal sheets inner skin	11
2.1.3	TremLock K-Zip non-ventilated roof on timber rafters with visible timber lining	12
2.1.4	TremLock K-Zip ventilated roof with common rafter insulation	12
2.2	TremLock K-Zip DuoPlus® 100 and TremLock K-Zip Duo® 100	13
2.2.1	TremLock K-Zip DuoPlus 100	13
2.2.2	TremLock K-Zip Duo 100	14
2.3	TremLock K-Zip FOAMGLAS® System as a standard and combined solution	15
3.0	**Transport · Storage · Inspection**	
3.1	Transporting to the building site or unloading at a designated area	16
3.2	Unloading on the building site	16
3.3	Storage on the building site	17
3.4	Checking incoming materials	17
3.5	Special instructions: transport, storage and installation of TremLock K-Zip profiled sheets made from AluPlusZinc	17
3.6	Noise adsorber and anti-condensation coatings	18
4.0	**Clip installation**	
4.1	Attachments	19
4.2	Clip positioning	24
5.0	**Installing TremLock K-Zip · renovating with TremLock K-Zip**	
5.1	Wind, weather	29
5.2	Positioning	30
5.3	Corrosion protection	30
5.4	Installation	30
5.5	Fixed point design: TremLock K-Zip aluminum clip / TremLock K-Zip composite clip	31
5.6	Zipping procedure	34

Overview

		Page
6.0	**Connections**	
6.1	Ridge	36
6.1.1	Upward fold	36
6.1.2	Ridge closure	36
6.1.3	Closure filler	36
6.1.4	Spacer section / sliding element	37
6.1.5	Ridge cover plate	37
6.2	Gable end	38
6.2.1	Gable end channel	38
6.2.2	Gable end clip	38
6.2.3	Gable end support rail	39
6.2.4	Cover plate	40
6.3	Eaves closure and static edge reinforcement	41
6.3.1	Gutter overhang	41
6.3.2	Drip angle	41
6.3.3	Folding	43
6.3.4	Sealing the eaves	43
7.0	**Installations**	
7.1	Vents	44
7.2	Fall arrest systems	44
7.3	Walkways / steps	45
7.4	Solar systems	45
7.5	Seam clamps (Cable clip, Seam clip stainless steel)	45
8.0	**Welding · cutting · bending**	
8.1.	TIG welding	46
8.1.2	Welding preparation	46
8.2	Welding backing strip	46
8.3	Cutting	47
8.3.1	Cutting and sawing	47
8.3.2	Cut-off discs	47
8.4	Folding	47

Overview

		Page
9.0	**Useful hints and advice**	
9.1	Installation template for installing clips	48
9.2	Preassembly of the clips on hat channel profiles	48
9.3	Storing long profiled sheets	48
9.4	Installation with several installation groups	49
9.5	Protection when drilling through U disc	49
9.6	Roof projections with clip bars	50
9.7	Roof projections without clip bars	51
9.7.1	Requirements for installation	51
9.8	Roof projections constructed from TremLock K-Zip profile sheets	52
9.9	Removing dirt	53
10.0	**Special tools**	
10.1	Tools and accessories	54
11.0	**System components and accessories**	
	TremLock K-Zip composite clip type E	55
	Clip bar	56
	Clip bar curved	56
	Fixed point clip bar including fastening holes	56
	Thermal barrier polyamide	56
	Rotatable clip	57
	Rotatable clip rail perforated	57
	Gable end channel	57
	Gable end clip 50/65	58
	Gable end support rail	58
	Sliding element	59
	TremLock K-Zip flashing sheet with large sheet upstand	59
	Cable clip	60
	Seam clip stainless steel	60
	Seam clip aluminum	60
	Spacer profile	61
	Flat bar	61
	Ridge closure	61
	Closure filler	62

Overview

Page

11.0 System components and accessories (cont.)

Seam filler	62
Drip angle	62
Compressed adhesive tape	63
Expansion compensating ribbon	63
Repair cover strip	64
Omega profile	64
Comb-profiled jointing sheet	64
TremLock K-Zip welding backing strip	65
Pipe vent	65
TremLock K-Zip snow guard system	66
Snow guard bracket	66
Snow stopper	66
Aluminum snow guard pipe	66
Roof step – short grid	67
Roof step – standing grid	67
Aluminum continuous access grid	67
Bracket for aluminum access grid	68
Connecting elements	69

1.0 Introduction

Area of application

This Installation Guideline specifies the correct method for installing TremLock K-Zip profiled sheets, the fasteners and accessories.

Installing the profiled sheets

The profiled sheets may only be installed by skilled workers employed by the manufacturer or by companies who have been properly instructed and authorized by the manufacturer. The manufacturer, or whoever is responsible for laying the profiled sheets, must prepare installation instructions describing how the elements are to be laid, and must give them to the installation companies.

TremLock K-Zip can only be installed by companies approved and trained by the manufacturer.

Preparatory work

Certification of the stability and suitability of use is to be provided for each individual case. An installation plan must be derived from these certificates, and must also be available on-site. The contents of the installation plans are regulated by DIN 18807.

Before work starts, the geometry and the dimensions of the as built structure, as handed over, must be compared with the inspected plans. Contact the factory immediately if there are any deviations.

General instructions

The instructions, recommendations and requirements correspond to the present level of knowledge. They are based on the experience of the manufacturing works as well as the practical experience of the building companies and are provided to the best of our knowledge. Therefore, no enforceable claims for defects, errors or incompleteness can be derived.

Metric and US Customary System conversions

In this manual, metric dimensions are the governing and most precise measurements. USCS values (inches or feet) are provided as the closest practical fractional equivalents for convenience. For exact dimensions, refer to the metric measurements.

Special tools

Before starting installation, check the zipping machine, hand closing tool, ridge folding tool and unzipping device. The zipping machine must close fully and the roller sets must be correctly fitted.

2.0 The System

TremLock K-Zip is a system of sheets designed for low pitched roofs to a minimum of 1/4:12 degrees when running from ridge to eaves as well as for steeper pitches.

TremLock K-Zip profiled sheets are available in a variety of construction widths and can be manufactured in different shapes such as straight, convex, concave, convex and concave curved, as well as XT freeform shapes to suit the roof geometry.

The aluminum sheets are installed with clips which are locked into the seam and concealed by the adjacent sheet. This means that the fasteners are positioned beneath the roof covering.

As a result of this, the fasteners are located underneath the roof cladding. It is not penetrated. The clips permit the sliding movements of the TremLock K-Zip profiled sheets that occur due to changes of temperature. The sliding movements must not be impaired by connection to other structural elements (chimneys etc.).

TremLock K-Zip-12

TremLock K-Zip-13

TremLock K-Zip-16

TremLock K-Zip-17

TremLock K-Zip-20

2.1 TremLock K-Zip range of applications

The application determines the design

TremLock K-Zip profiled sheets are suitable both for non-ventilated and ventilated roofs of any shape or pitch from 1/4:12 and with any type of substructure or framework.

The construction design depends on the individual application. It must take into account the likely effects of snow, wind, heat, humidity and weathering.

High thermal insulation requirements can be easily fulfilled. The roof design can be adapted to suit the precise requirements of each individual building by selecting the appropriate thickness of thermal insulation. In addition to this, the system offers advanced detailed solutions for effective interior and exterior drainage which guarantee a high level of reliability throughout the lengthy service life of the building.

Insulated roof systems are the norm

The main applications for TremLock K-Zip roof systems are insulated roof structures supported by trapezoidal profiles, purlins, timber linings or concrete elements.

- Chemically neutral, fiber insulating materials—e.g. Rockwool insulating felt—are recommended as suitable thermal insulation. The insulation is laid into position and compressed to its required final thickness when the TremLock K-Zip profiled sheets are installed on top. There should be no cavity between the TremLock K-Zip sheets and the insulation.
- A convection barrier is required. When correctly installed, a vapor and convection barrier also provides the required air-tightness.
- The sound reduction values of the standard roof are outlined subsequently. Further improvements can be achieved through the use of additional layers.

Attention

Special notes on the installation of XT free-form profiles

A high level of planning and installation work is required for XT profiled sheets. It is essential that the work is planned in advance, and should be agreed with our Tremco Technical Services. The existing support construction must be examined carefully to see that it agrees with specifications, or whether it may have to be adapted. Any faults in the supporting construction will involve considerable additional expense if they have to be corrected later.

2.1.1 TremLock K-Zip non-ventilated roof on trapezoidal steel deck

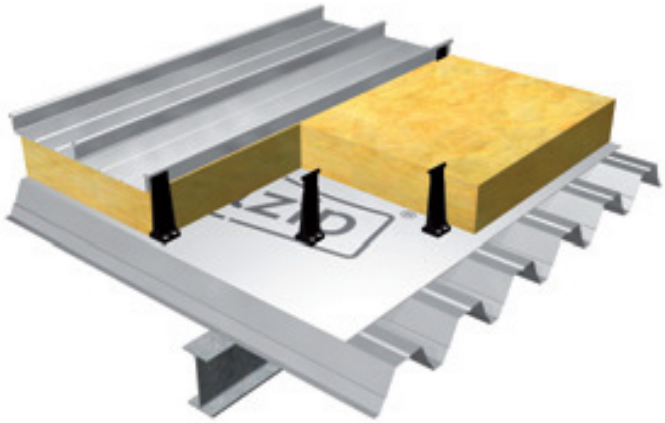

R'w=35 dB (A)

2.1.2 TremLock K-Zip non-ventilated roof on purlin with trapezoidal sheets inner skin

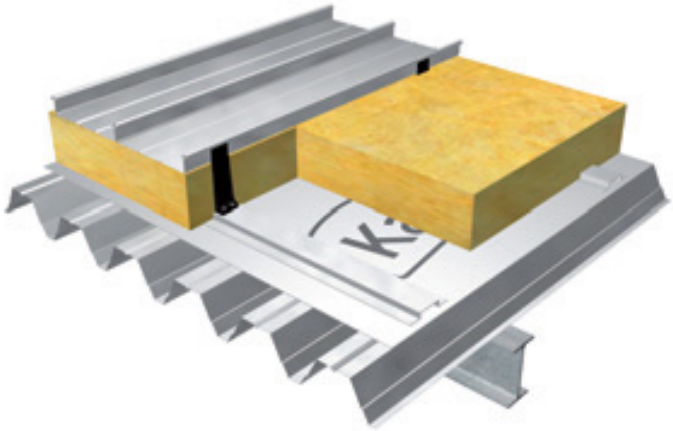

R'w=dB (A)

This very economical roof system is used both for industrial and residential buildings. In order to make sure that there are no air cavities under the TremLock K-Zip roof skin, compressible thermal insulation is used. Incorporated within the roof system the insulation material is compressed by approx. 3/4" (20 mm).

The loading on the top skin is not transferred to the inner skin as an evenly distributed load but rather at set points via the concealed fixing clips. The design roof load must be increased by 15% when dimensioning the trapezoidal steel sheets. The clips must be staggered on the inner sheet to make sure that the load is evenly distributed across all corrugations of the inner sheet.

If the roof is supported on purlins, the inner sheet has to be oriented parallel to the top layer. If the module of the inner sheet does not correspond with the TremLock K-Zip elements, a hat channel section must be installed to support the clips. If the TremLock K-Zip sheets can span the existing spacing of the purlins, the hat channel sections will be positioned on top of the purlins. In that case, the inner skin will only serve to hold the vapor and convection barrier and the thermal insulation.

For larger purlin spans, additional hat channel sections are required. In this instance, part of the load needs to be transferred by the inner sheet.

2.1.3 TremLock K-Zip non-ventilated roof on timber rafters with visible timber lining

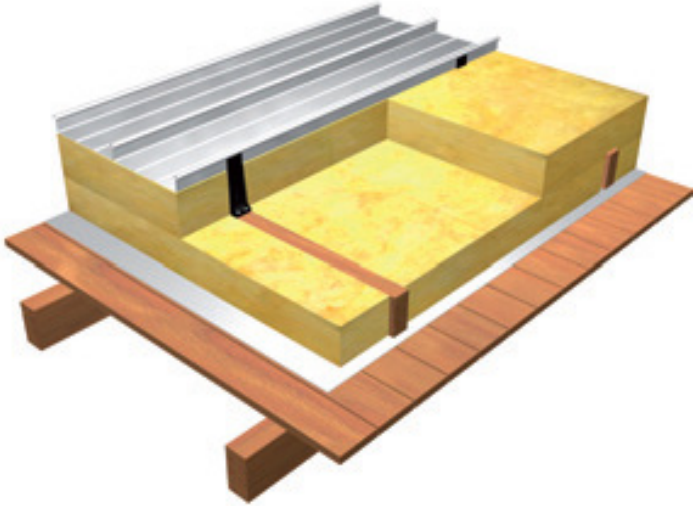

R'w=38 dB (A)

2.1.4 TremLock K-Zip roof with common rafter insulation

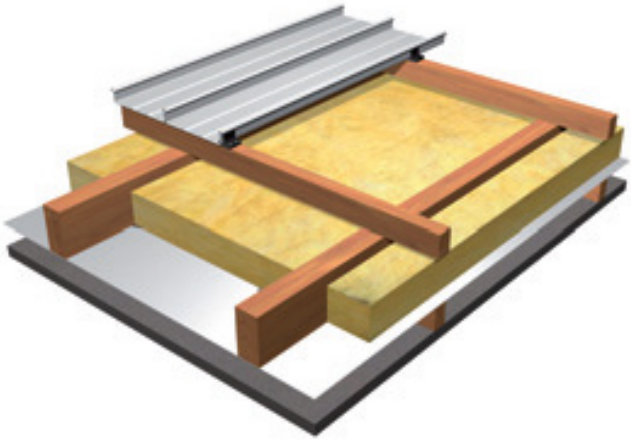

R'w=35 dB (A)

In residential buildings the roof system is frequently built-up using wooden rafters with visible timber lining. This is advantageous, because:

1. there is a clear separation between the trades of carpenters, roofers, etc.
2. a continuous flat vapor and convection barrier can be installed.

The clips can only be installed directly in the timber lining if this has a minimum thickness of 7/8" (23 mm). A minimum thickness of 3/4" (19 mm) applies for flat press boards, and 11/16" (18 mm) for OSBs. In both cases the fastener is visible from below. If the timber lining is too thin, then a timber purlin must be installed over the lining and attached to the rafters.

With roofs featuring a structure as shown on the left, it is quite often impossible to design the roof as a non-ventilated version because the distances are too great between the vapor and convection barrier and the roof skin. Consequently, perfect functioning of the vapor and convection barrier is a prerequisite condition.

Sufficient ventilation is essential for efficient dispersal of any condensation that might occur.

If there are any risks of wind driven snow, it may be necessary to install a film barrier to prevent snow from coming into contact with the insulating material.

2.2 TremLock K-Zip DuoPlus 100 and TremLock K-Zip Duo 100

2.2.1 TremLock K-Zip DuoPlus 100

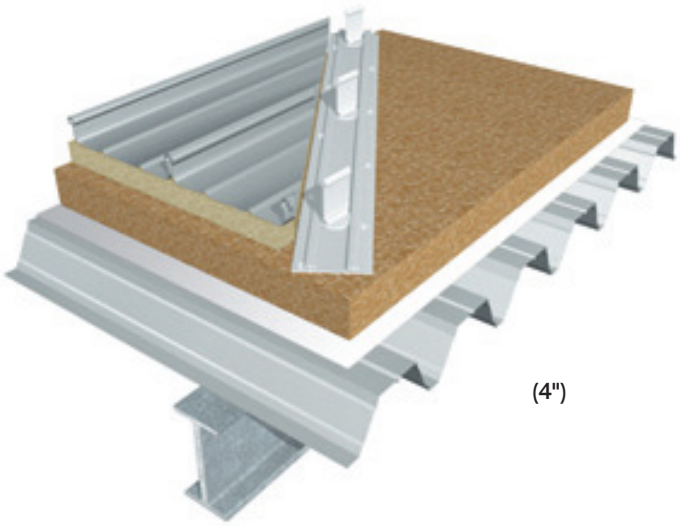

R'w=43 dB (A)*

The precise spacings along with the position of the rail and the number of connection elements are given in the installation plan.

The TremLock K-Zip DuoPlus 100 system combines the advantages of rigid insulation with the constructional possibilities offered by the conventional TremLock K-Zip roofing system.

The special design is almost cold-bridge free and has excellent sound absorption properties. An aluminum rail is placed on the rigid thermal insulation and is fixed to the substructure through the insulation. Special clips are inserted in the rail and are adjusted to suit the respective conditions. Connection of the individual clips to the rail is not necessary.

The patented and type-tested system consists of rigid thermal insulation, DuoPlus rail, DuoPlus clip and connecting elements to secure the DuoPlus rail, the compressible insulation and the TremLock K-Zip profiles sheets.

2.2.2 TremLock K-Zip Duo 100

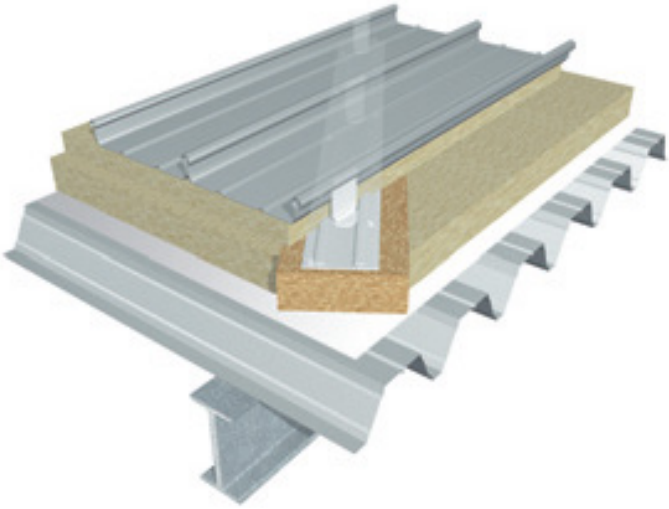

R'w=41 dB (A)

In the case of the TremLock K-Zip Duo 100 system, economic considerations are of central importance. For reasons of cost, a full layer of rigid thermal insulation is not necessary. If there are no specific sound insulation requirements, then the TremLock K-Zip Duo 100 system can be used, whereby a full layer of rigid thermal insulation is not necessary. The base for the TremLock K-Zip DuoPlus 100 is simply provided by rigid insulation strips with a width of 9-½" (24 cm) and a thickness of 4" (10 cm). The resulting spaces are filled with soft heat blanket insulation.

In the case of TremLock K-Zip DuoPlus 100, rigid thermal insulation only needs to be used in those areas specified by the statistical requirements. The rigid thermal insulation is replaced by a layer of blanket insulation in all areas where no reduction in snow loads is required. This type of roof design, which does not influence heat transfer or load bearing safety, is recommended if there are no specific sound insulation requirements.

When the rigid spacer strips are laid underneath the DuoPlus rails, it is not necessary to carry out the time-consuming task of marking-up, as the contours of the steel trapezoidal profiles are visible through the vapor and convection barrier.

2.3 TremLock K-Zip FOAMGLAS® † System as a standard and combined solution

This roof design and the system components used are particularly suitable for building projects which place high demands on ensuring that the roof system is free from condensation and where there is therefore a permanent risk of condensation formation.

The TremLock K-Zip FOAMGLAS® System offers a high level of energy efficiency as the thermal insulation is airtight and impervious to water vapor. What's more, there is no mechanical attachment between the TremLock K-Zip profiled sheets and the supporting structure. This means there is no coldbridging. As Foamglas is impervious to moisture penetration, the insulation can also act as a watertight substructure.

The FOAMGLAS® slabs are bonded to different substructures using either a cold-bonding agent or hot bitumen. In order to attach the compound clips, the galvanized steel claw plates are inserted under heat in a fixed installation plan taking into account the respective roof geometry. The compound clips are installed on the claw plates using the recommended fastening elements.

The TremLock K-Zip profiled sheets are installed in the usual manner. In order to ensure economic efficiency, the thickness of the compressible thermal insulation can be varied. Foamglas has a minimum thickness of 3-3⁄32" (80 mm).

TremLock K-Zip FOAMGLAS® System as a standard solution

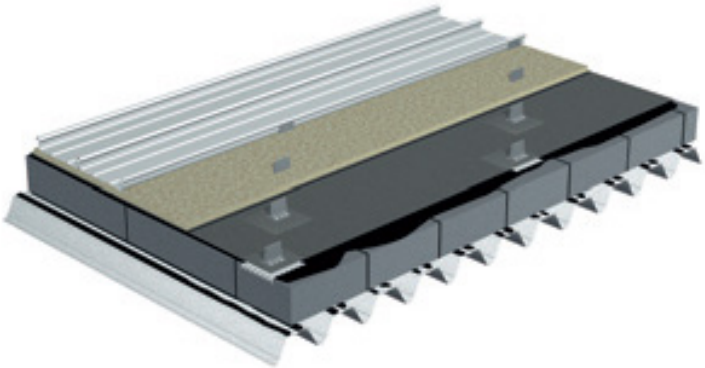

TremLock K-Zip FOAMGLAS® System as a combination solution

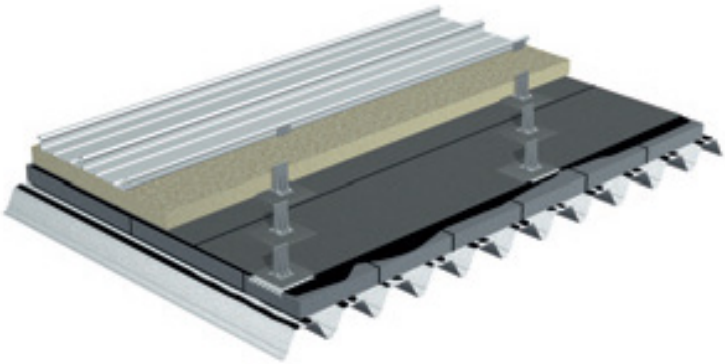

†FOAMGLAS® is a registered trademark of the German company FOAMGLAS® GmbH.

3.0 Transport · Storage · Inspection

3.1 Transporting to the building site or unloading at a designated area
In general, TremLock K-Zip sheets are transported by road.

3.2 Unloading on the building site

- General rule: access to the unloading point must be guaranteed.
- Before delivery, the person who has placed the order must check the site and it may also be necessary for the transport agent to check the route.
- Delivery dates must be agreed with the supplier.
- Packages can weigh up to 7,000 lb, plus the weight of the cross beam. (Check crane capacity!)
- Make prior arrangements for lifting gear such as cranes, fork lift trucks, spreader beams, sling belts, etc. Protect edges of pallets if sling belts are used. Sources of supply for sling belts can be supplied on request.
- Maximum load per suspension point must not exceed 1,600 lb.
- Projecting ends exceeding 14 ft (4.50 m) must be avoided!
- Pre-curved TremLock K-Zip: take special care when unloading / taking pre-curved TremLock K-Zip onto the roof. You must allow for the fact that extra sling belts need to be used. In many cases, the pallets cannot be placed directly on the substructure. The profiled sheets have to be lifted onto the roof individually or in small bundles.

Owing to the different panel seam orientation, pallets must be stored in accordance with the direction of installation to avoid having to turn the sheets on the roof. Installation is made in the direction of the small panel seam.

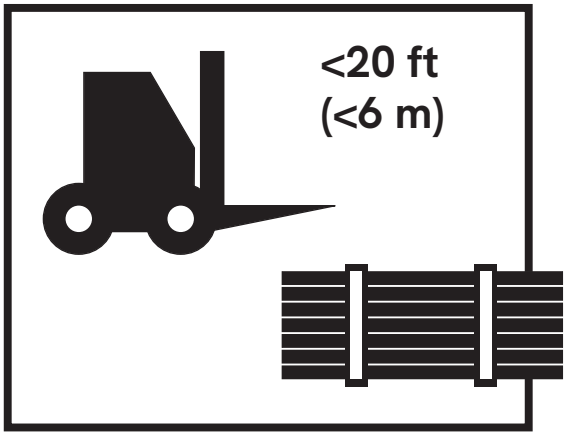

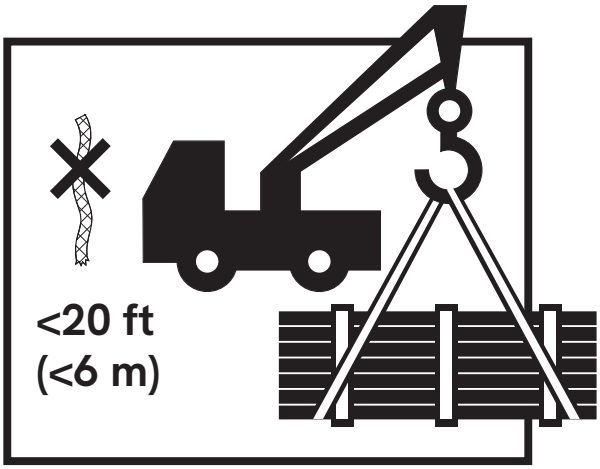

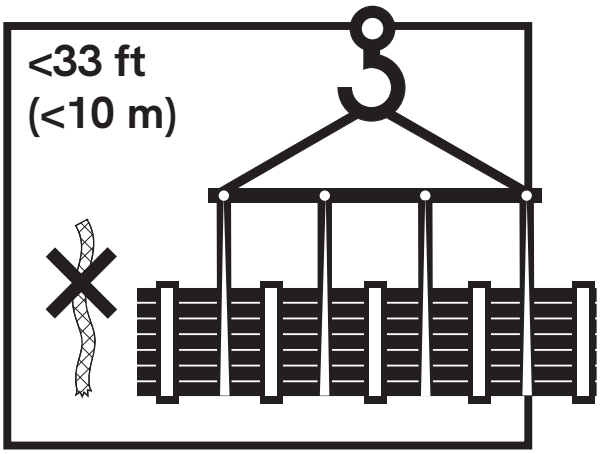

3.3 Storage on the building site

Packages are to be stored in an inclined position and protected against the weather. Building site stores, including those on the roof, must be roofed over and well-ventilated. Condensation must be avoided. Opened packages must be covered over again during interruptions to the assembly.

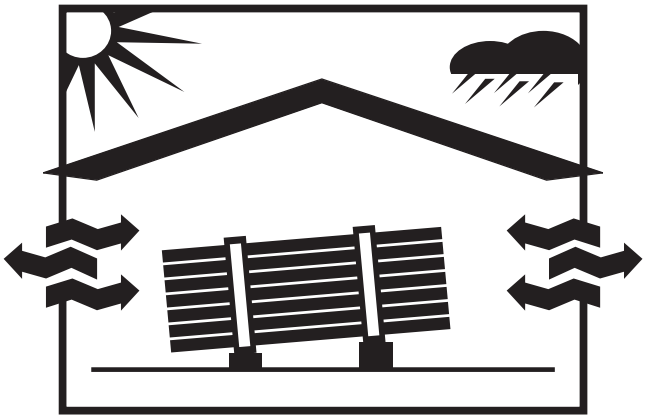

- When storing on the roof, ensure that the load bearing capacity of the substructure is sufficient.
- Exercise caution when opening packages stored at an angle: there is danger of sheets sliding sideways and/or in the direction of slope.
- Always cover translucent sheets to protect them from dirt and direct sunlight. Magnifying glass effect may cause distortion and discoloration.

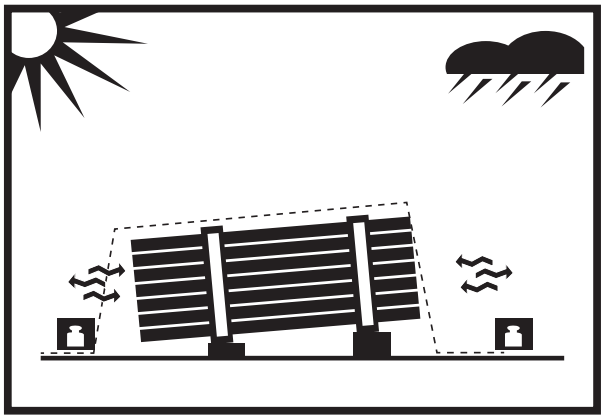

3.4 Checking incoming materials

Obtain confirmation of any material and packaging deficiencies from the forwarder and notify the supplier immediately.

Check that the number of packages and their contents agree with the delivery documents. Inform the supplier immediately of any discrepancies in dimensions or quantities, etc. Period of time in which transport damages have to be claimed:

Maximum 1 week after arrival on the building site although an earlier claim is advantageous to all parties.

Permissible length tolerances for TremLock K-Zip sheets:

- For sheets of up to 10 ft (3 m) in length: +3/8"/-3/16" (+10 mm/-5mm)
- For sheets of over 10 ft (3 m) in length: +3/4"/-3/16" (+20 mm/-5mm)

3.5 Special instructions: transport, storage and installation of TremLock K-Zip profiled sheets made from AluPlusZinc

- Always ensure that AluPlusZinc is transported and stored in a dry and ventilated condition. Open transportation in unsettled weather conditions should be avoided.

- During storage, ensure that condensation does not form inside the coils or stacks. Storage in damp or warm locations, or locations where the temperature is subject to frequent change, should be avoided.
- Building site stores must be covered and ventilated – also on the roof. During production on-site the unprotected surface must not be exposed to rain. Roll formed profiled sheets should be laid immediately.

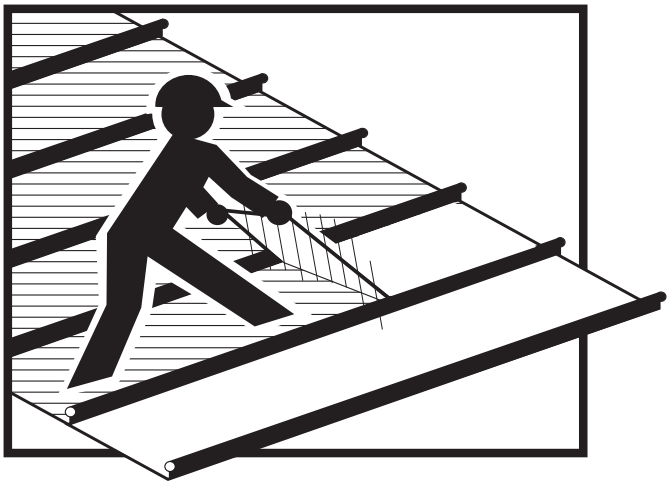

- The protective film on the profiled sheets not only protects them during transport, but also while they are being zipped. It is important to make sure that this film is removed from the small seam prior to zipping.

- The film is to be removed at the latest 2 weeks after delivery, or immediately after the zipping process. After this the profiled sheet should not be walked on.
- The profiled sheets must not be allowed to come into direct or indirect contact with other materials which have a corrosive effect on aluminum and/or zinc.
- Do not allow the surface of AluPlusZinc to come into direct contact with wet coverings. No objects (e.g. including damp thermal insulation) should be placed or stored on AluPlusZinc.
- Never attempt to remove dirt using abrasive or corrosive materials.
- Weld seam, welded joints can be carefully painted over with a fine paint brush (RAL 7030 – weathered “new”; RAL 7023 – weathered “old”; zinc dust paint – changing grey tone depending on angle of vision).

3.6 Noise adsorbing and anti-condensation coatings

- Do not allow the coatings to come into direct contact with dirty or wet surfaces.
- The coated surfaces must not be exposed to direct rain.
- Ensure adequate ventilation during storage.

4.0 Clip installation

4.1 Attachments

TremLock K-Zip clips are attached to the sub-structure using stainless steel screws or aluminum bulbtite blind rivets. Only the approved fasteners must be used. As a general rule, a screw or rivet is arranged on each side of the clip web. TremLock K-Zip fasteners and bulbtite blind rivets should be arranged in a diagonal manner. The number of attachments can also be increased in the edge areas of the roof. These details are outlined in the installation plan.

Please note:
The number and the positioning of the fastener elements are to be found in the installation plan or in the static calculations!

Holes for self-tapping screws or self drilling screws with diameter > 1/4" (6 mm) and sealing washer

Holes for TremLock K-Zip drilling screws Type SDK or bulbtite rivets

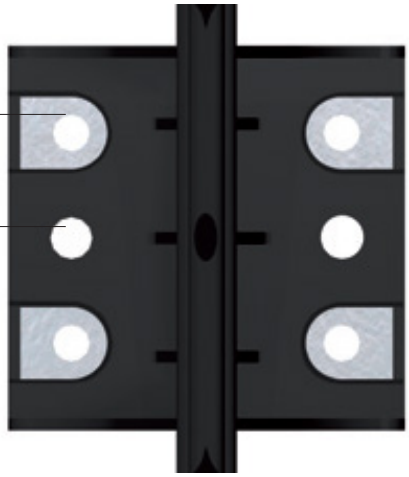

Fixing fastening elements:

1. self-tapping screws
2. drilling screws
3. bulbtite rivet

Use of spacer caps in combination with the TremLock K-Zip composite clip
The TremLock K-Zip composite clips can be combined with spacer caps (DK) in order to compensate for height tolerances. A combination is thereby permissible only in the following variants:

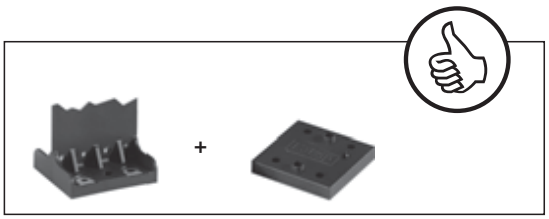

Composite clip + DK 10
Combination for the desired clip height

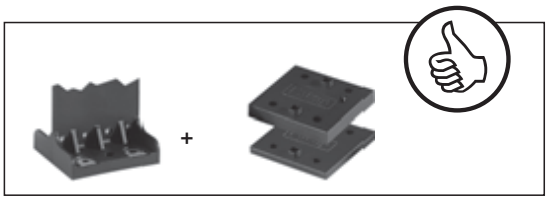

Composite clip + DK 10 + DK 5
Max. combination for the desired clip height and to compensate for height tolerances

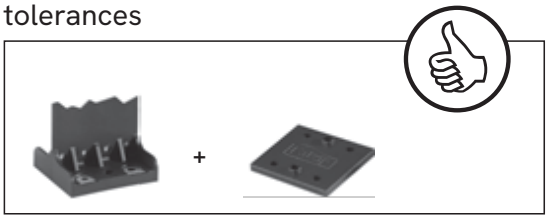

Composite clip + DK 5
to compensate for height tolerances

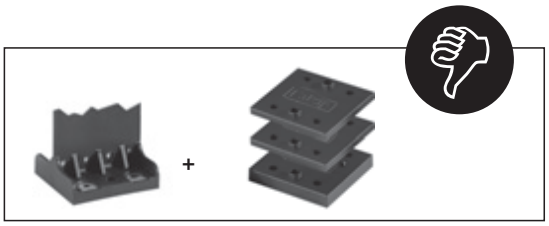

Composite clip with several DKs
– not permissible

Timber purlins or spacers

As a general rule, the timber must be predrilled when using screws. This is not necessary when self-drilling screws are used.

Self-drilling screw:
e.g. SFS-SDK2 –S-377-6.0 x 45

without spacer cap
self-drilling screw:
e.g. SFS-SXW-S16-6.5 x 50
or
e.g. SFS-SDK2-S-377-6.0 x 35

with spacer cap DK 5
TremLock K-Zip self-drilling screw:
e.g. SFS-SDK2-S-377-6.0 x 45

Timber lining minimum thickness 29/32" (23 mm)

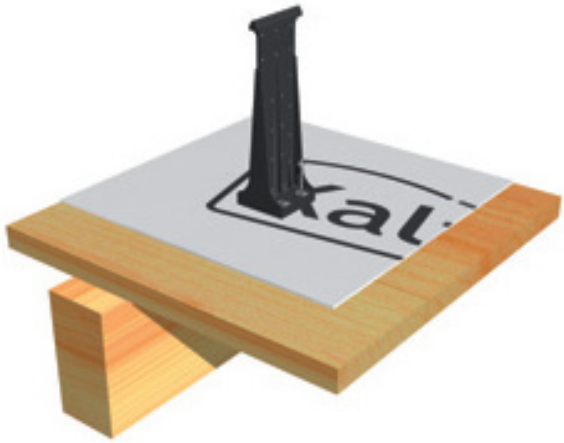

with spacer cap DK 10
or spacer cap DK 10 + DK 5
self-drilling screw:
e.g. SFS-SXW-S16-6.5 x 50
or
self-tapping fastener:
e.g. SFS-TDA-S-S16-6.5 x 64
predrilled with ø 4.8 mm
or
e.g. SFS-SDK2-S-377-6.0 x 60

Through the lining into purlins or rafters

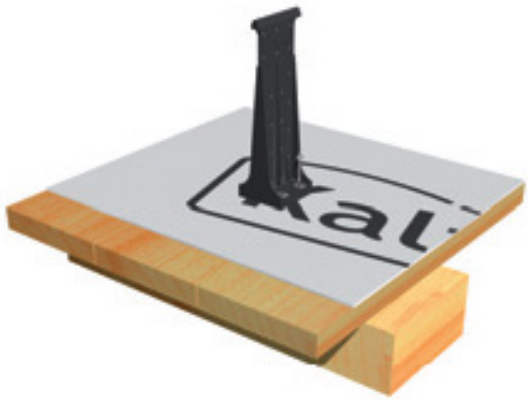

without spacer cap or
with spacer cap DK 5 or
spacer cap DK 10 or
spacer cap DK 10 + DK 5
self-tapping fastener:
e.g. SFS-TDA-S-S16-6.5 x 76
predrilled with ø 4.8 mm

On steel purlin with seam thickness < 1/4" (6 mm)

without spacer cap
self-drilling screw:
e.g. SFS-SX14/12-S16-5.5 x 38

with spacer cap DK 5
self-drilling screw:
e.g. SFS-SX14/12-S16-5.5 x 38

with spacer cap DK 10 or spacer cap DK 10 + DK 5
self-drilling screw:
e.g. SFS-SX14/38-S16-5.5 x 61,
SFS-SX14/4-38-S16-5.5 x 61
or self-tapping fastener:
e.g. SFS-TDB-S-S16-6.3 x 38
pre-drill appropriately for the thickness of the seam

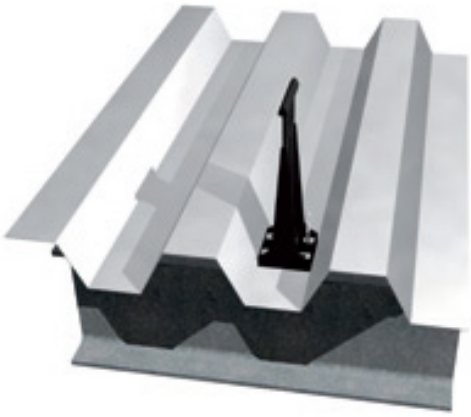

On steel purlin with seam thickness > 1/4" (6 mm)

Attention

In order to guarantee that the clip is properly fastened, it is necessary to ensure that no drilling swarf gets between the clip and the supporting construction. (This can be achieved by, for instance, fitting the clip with the aid of a grip wrench.)

self-tapping fastener:
e.g. SFS-TDB-S-S16-6.3 x L
pre-drill appropriately for the thickness of the seam).

Be sure to remove drilling swarf.

On steel trapezoidal profile (thickness max 3/64" (1.25 mm)

without spacer cap or
with spacer cap DK 5
TremLock K-Zip self-drilling screw:
e.g. SFS-SDK2-S-377-6.0 x 35
or bulbtite blind rivet:
e.g. SFS-RV-6604-6-12W

with spacer cap DK 10 or
Spacer cap DK 10 + DK 5
TremLock K-Zip self-drilling screw:
e.g. SFS-SDK2-S-377-6.0 x 45

On ProDach rail
(thickness 3/64" (1.15 mm)

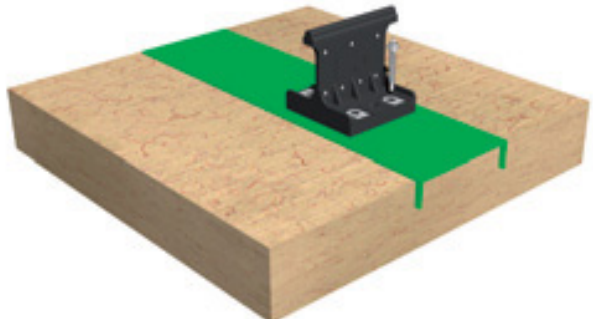

without spacer cap
with spacer cap DK 5
TremLock K-Zip self-drilling screw:
e.g. SFS-SDK2-S-377-6.0 x 35
or bulbtite blind rivet:
e.g. SFS-RV-6604-6-12W

with spacer cap DK 10 or
Spacer cap DK 10 + DK 5
TremLock K-Zip self-drilling screw:
e.g. SFS-SDK2-S-377-6.0 x 45

TremLock K-Zip clips must not be attached using hot fired pins!

On a steel hat channel profile (thickness 1/16" (1.50 mm)

TremLock K-Zip self-drilling screw:
e.g. SFS-SDK3-S-377-6.0 x 30
or self-drilling screw:
e.g. SFS-SX3/10-S16-5.5 x 28
or bulbtite blind rivet:
e.g. SFS-RV-6604-6-12W

with spacer cap DK 5
self-drilling screw:
e.g. SFS-SDK3-S-377-6.0 x 30
or self-drilling screw:
e.g. SFS-SX3/15-S16-5.5 x 38
or bulbtite blind rivet:
e.g. SFS-RV-6604-6-12W

with spacer cap DK 10 or spacer cap DK 10 + DK 5
self-drilling screw:
e.g. SFS-SX3/20-S16-5.5 x 52

TremLock K-Zip DuoPlus 100 / Rotatable clip and TremLock K-Zip DuoPlus 100 / Rotatable clip-rail, perforated

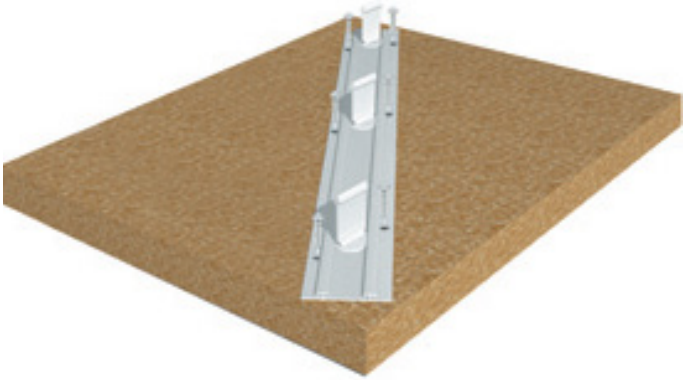

With the development of the DuoPlus rail and TremLock K-Zip the DuoPlus clip, a total solution has been created for the secure and convenient installation of the mounting elements for the TremLock K-Zip profiled sheets.

After the rigid insulation has been installed, the rails are aligned according to the calculations and are mounted in the steel trapezoidal profile substructure using the SD2-S-S16-6.0 x 4 fastener element from SFS intec. The approved dowel must be used for applications on concrete or aerated concrete. The DuoPlus clips are then manually rotated in.

4.2 Clip positioning

General
The distance between one clip and the next must never be less than the width of the TremLock K-Zip profiled sheet.

The maximum positive tolerance is about 1/8" (3.0 mm). The clips must be positioned as far apart as possible on rounded TremLock K-Zip profiled sheets. That is therefore 13-7⁄32" (336 mm) in the example below. Otherwise it is not possible to rule out the possibility of buckling. For TremLock K-Zip profiled sheets with a thickness of t = 3/64" (1.2 mm), the positioning dimension is to be increased by 5/64" (2 mm) above the nominal dimension, in this case 13-3⁄16" (335 mm).

The clips must be accurately aligned. This happens automatically if the positions of the clips are laid out with a marking line.

Example: TremLock K-Zip 13

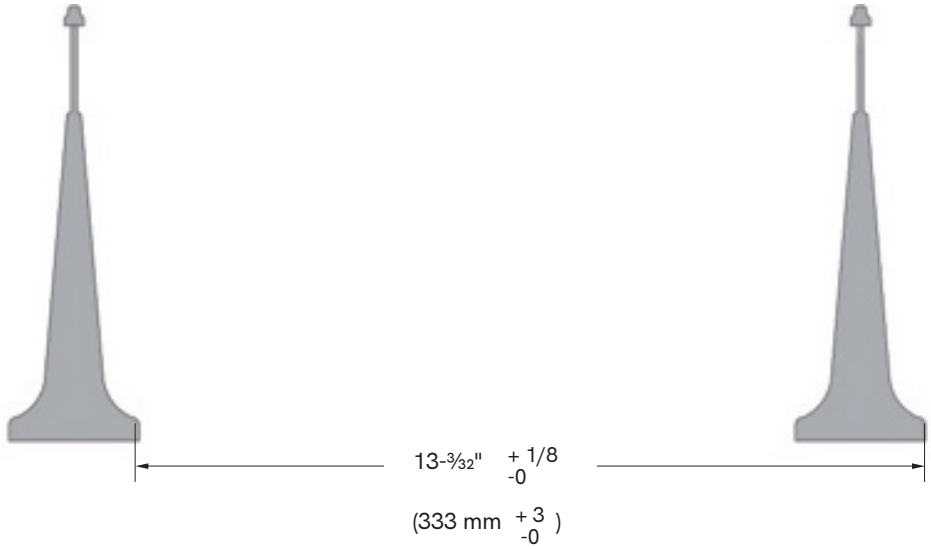

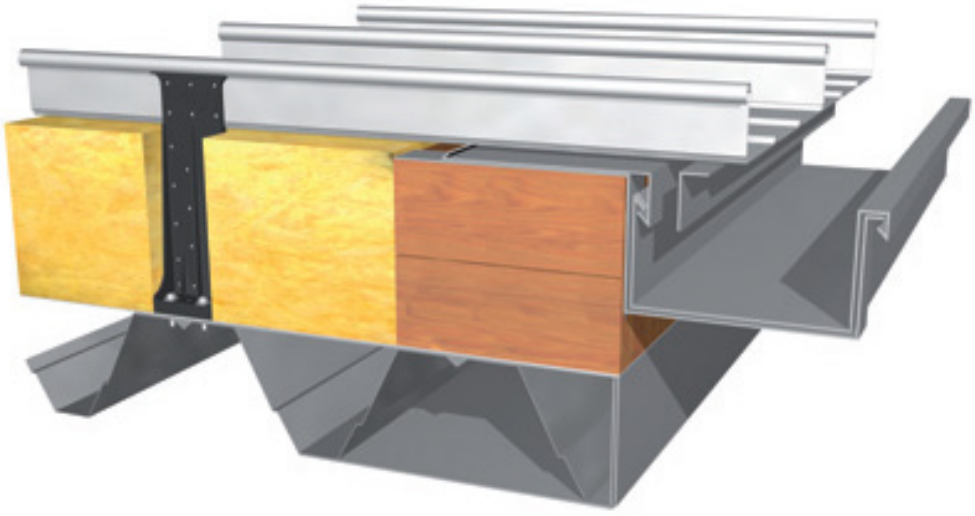

Rafter roof

The clip arrangement on a rafter roof begins with a continuous row of clips in each case on the eaves and on the ridge. However, the row of clips on the eaves must not be positioned on the gutter board but, as is the case on the entire roof, on the supporting deck directly behind the gutter board. This ensures that, particularly in the case of low roof pitches, an inverse pitch is not created in the eaves area of the roof as a result of an incorrect gutter board height. Proceeding outwards from the eaves, no clip is positioned on the second upper seam flute of the supporting deck, so that the next clip to be positioned will be on the third upper seam flute. Each further clip will now be staggered by one upper seam flute. When the maximum number of clips is reached then a new row should begin.

When the clips have been correctly positioned, the arrangement should look like the positioning scheme outlined below. Under normal circumstances, the clip spacing in the edge and eaves areas of the roof is reduced to take into account the increased suction forces in these areas. For convenience, an additional clip row is positioned in this area in each case. The installation plan provides more detailed information on this.

Attention

At least 2 clips must be positioned in each truss span on the upper strap flute of each trapezoidal profile.

Positioning scheme 1

TremLock K-Zip clips

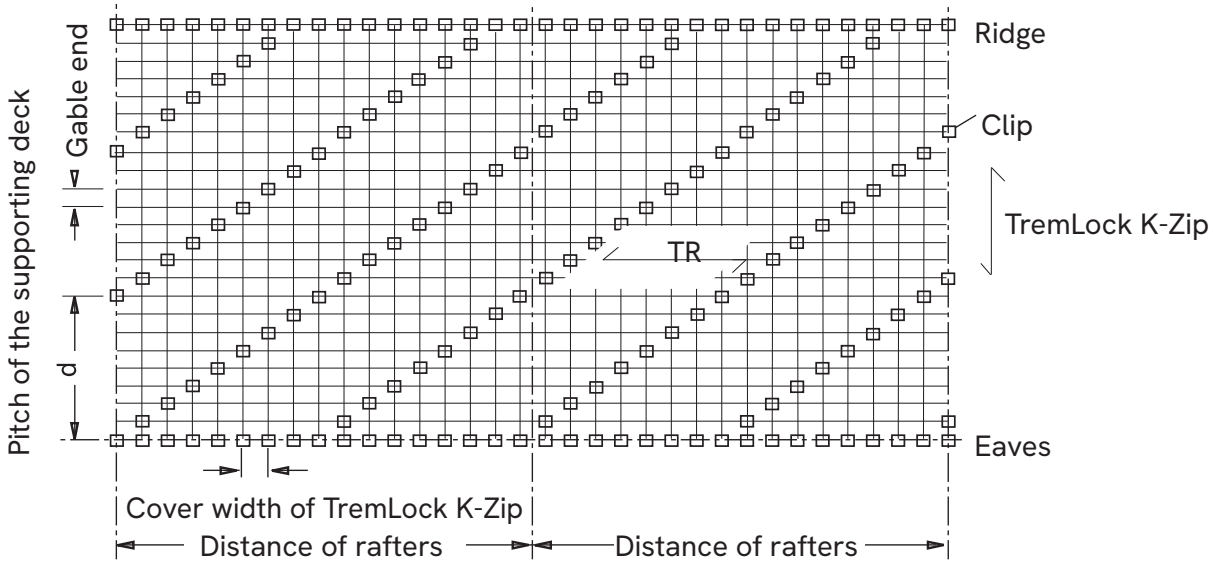

d = clip distance

TR = trapezoidal profile

4.0

Positioning scheme 2

TremLock K-Zip clips

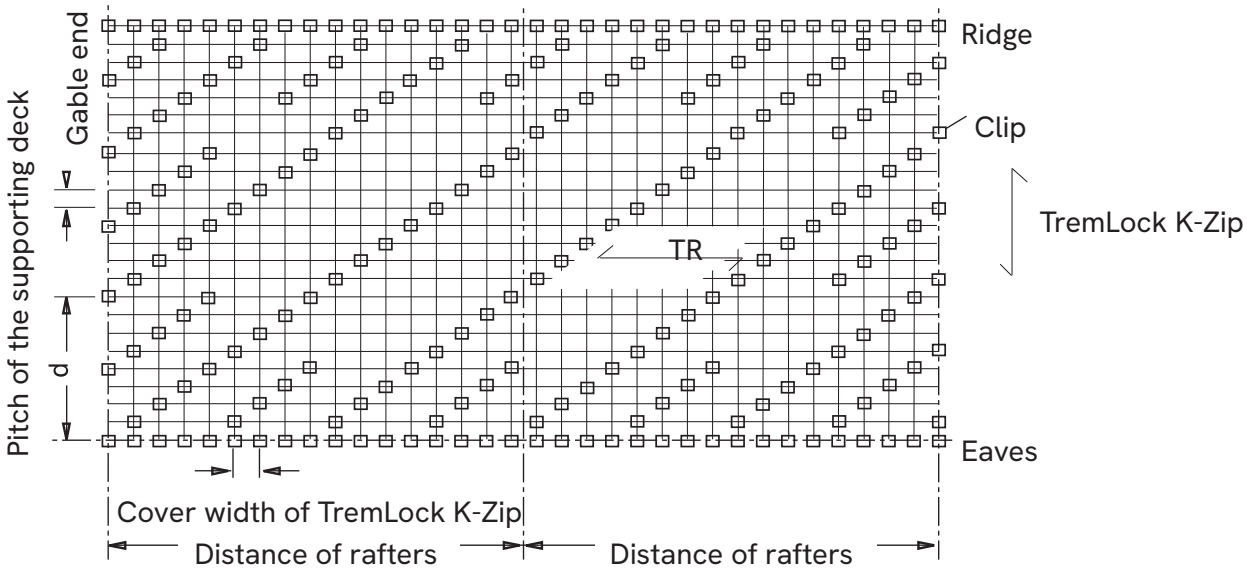

d = clip distance
Distances not to scale

TR = trapezoidal profile

Positioning scheme DuoPlus 100 roof design

The system requires that the DuoPlus rails are positioned at an angle of 45°. The position of the rails is given in the installation plan.

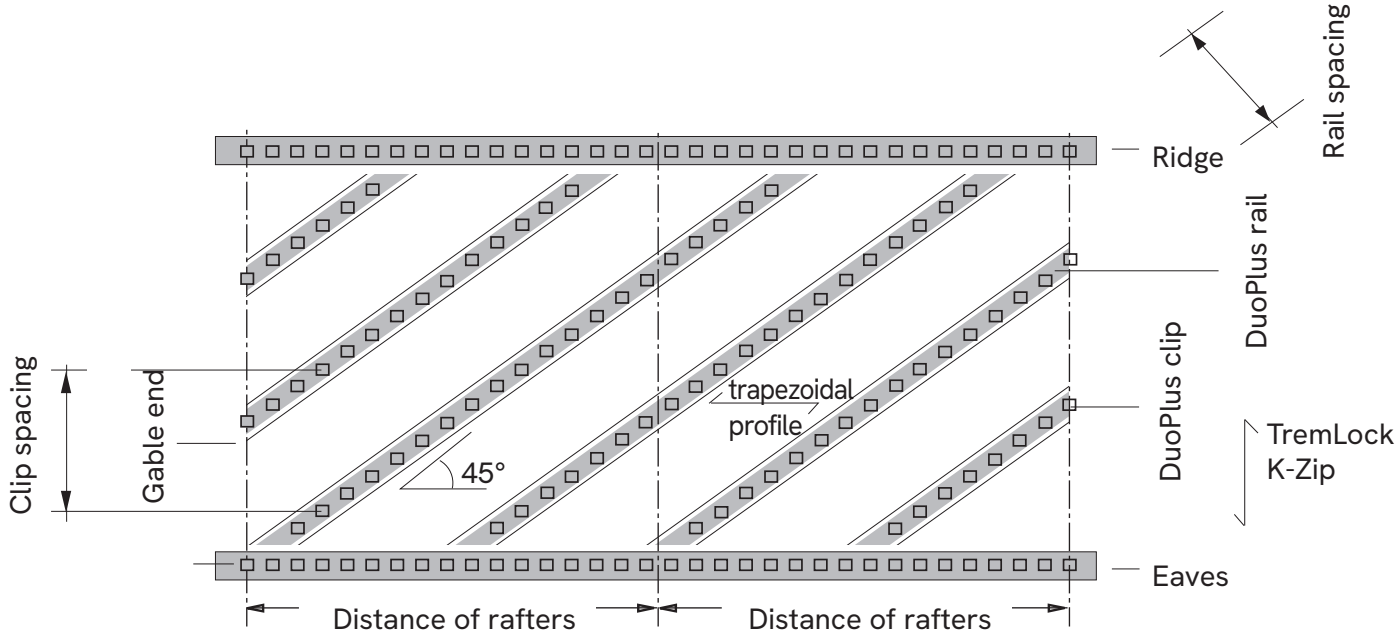

Purlin roof

On purlin roofs, a row of clips is arranged on each purlin. Higher suction loads are to be accounted for in the edge areas of purlin roofs also. Occasionally it may be necessary to provide additional rails or purlins in this area. With small spacings between the purlins, it could be sufficient to only place clips on every second purlin. In order to evenly distribute the loads onto all purlins, the clips are fixed onto the purlins in a staggered arrangement. A stress calculation is required (see positioning scheme 2).

Further details can be found in the installation plans.

Positioning scheme 1

TremLock K-Zip composite clips

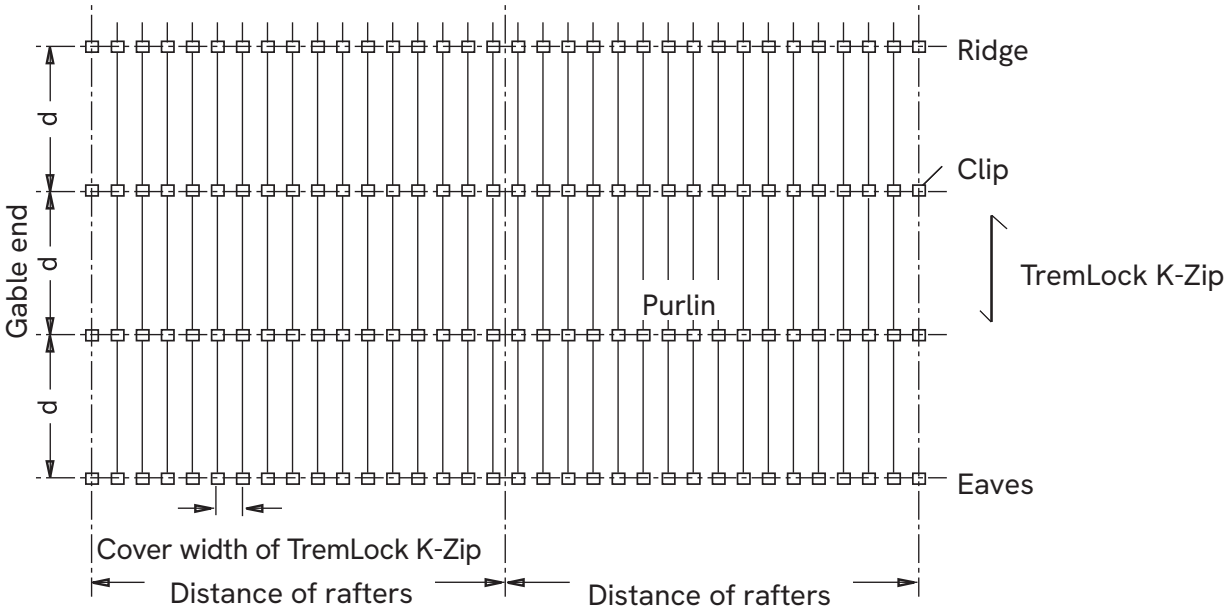

d = clip distance = purlin spacing

Positioning scheme 2

TremLock K-Zip composite clips

Clip positions with closer spaced purlins (e.g. re-roofing)

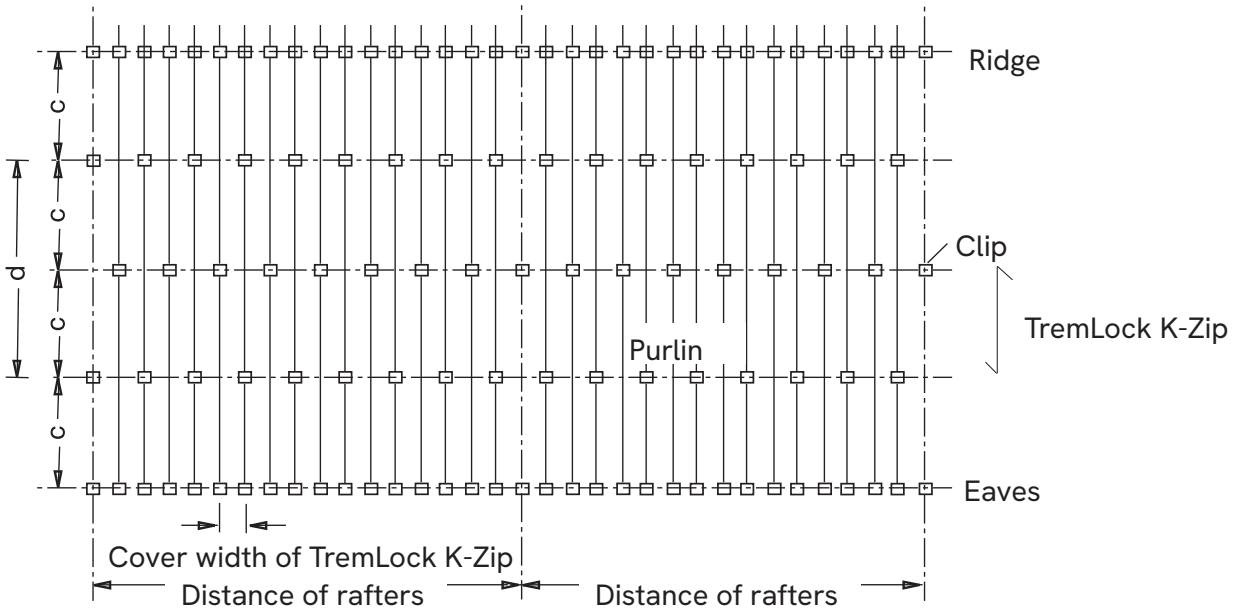

c = purlin spacing d = clip distance

Distances not to scale

Positioning scheme DuoPlus 100 roof design

The system requires that the DuoPlus rails are positioned parallel to the purlins. The position of the rails is given in the installation plan.

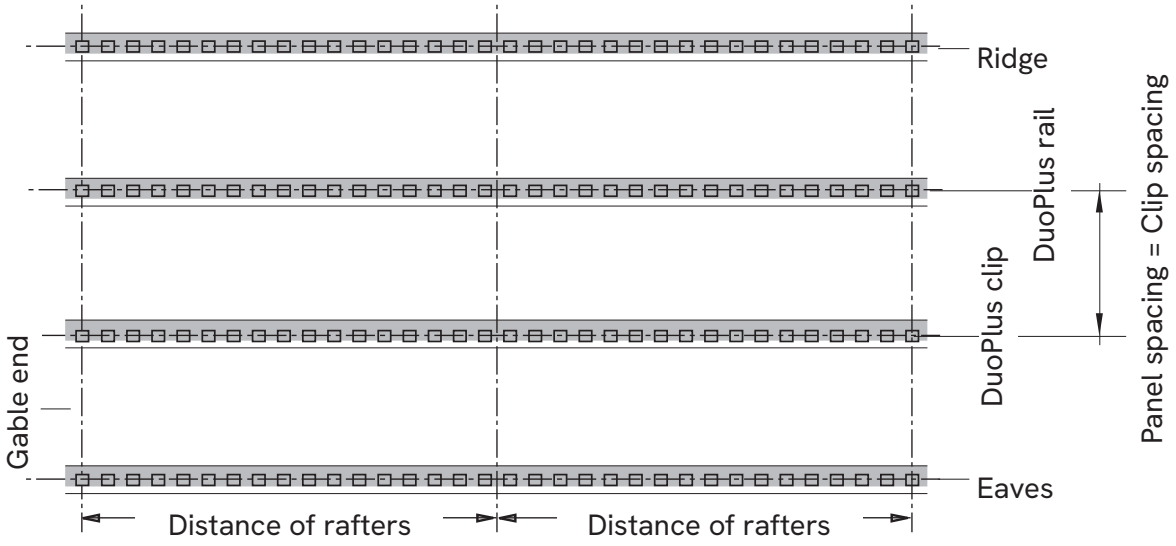

Distances not to scale

5.0 Installing TremLock K-Zip · renovating with TremLock K-Zip

Principal rule:
Zip each sheet immediately after laying! This is the only way to ensure the load bearing capacity of the system and to provide the necessary protection against wind forces.

5.1 Wind, Weather

TremLock K-Zip sheets are light and have a large wind uplift area. Therefore exercise caution when storing open packages and lifting TremLock K-Zip sheets onto the roof.

- Lash down open packages and discontinue installation work in strong winds, immediately fasten individual sheets and zip together.
- In particular, secure the last sheet from blowing away, e.g. by provisionally fastening with the gable end clip.
- While installing it is possible to walk as far as the subsequent span on profiled sheets without doing anything to spread the load, if they have been zipped on at least one side in the installation area:

Load bearing capacity‡:

TremLock K-Zip

Sheet thickness	TremLock K-Zip-12	TremLock K-Zip-13	TremLock K-Zip-16	TremLock K-Zip-17	TremLock K-Zip-20
Ts	Ls	Ls	Ls	Ls	Ls
.031" (.8 mm)	9.5' 2.90 m	9.5' 2.90 m	9.8' 3.00 m	8.2' 2.50 m	9.8' 3.0 m
.035" (.9 mm)	11' 3.35 m	11' 3.35 m	11" 3.40 m	8.5' 2.60 m	11' 3.4 m
.039" (1 mm)	12.4' 3.80 m	12.4' 3.80 m	12.4' 3.80 m	8.5' 2.70 m	12.4' 3.8 m
.047" (1.2 mm)	12.4' 3.80 m	12.4' 3.80 m	12.4' 3.80 m	9.5' 2.90 m	12.4' 3.8 m

Ls = clip spacing

Use load distributing planks on wider spans or larger cover widths.
Please contact Tremco technical support for additional assistance regarding walkability on the roof panels.

‡Applies only to stucco-embossed and color-coated TremLock K-Zip profile sheets. Other material combinations are available on request.

5.2 Positioning

- Follow the installation plans! Measure and string out roof and wall areas. Arrange sheet widths so that they meet transitional points such as roof lights, smoke vents, etc. in accordance with the plans.
- The construction width (or installation dimension) of curved roofs must be increased by 1/8" (3 mm).
  The dimension must not be less than the construction width.

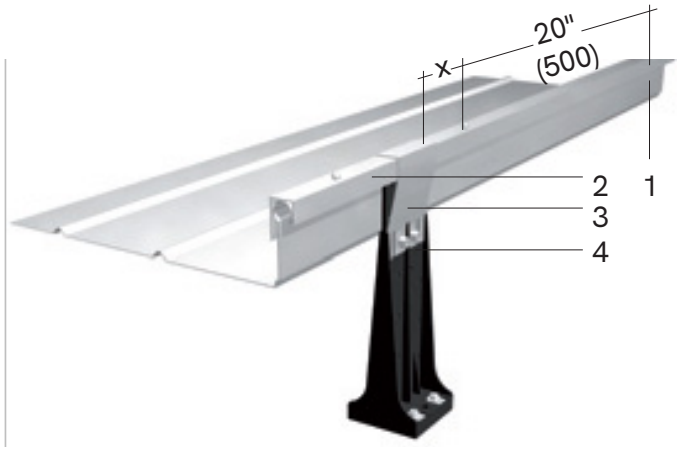

5.3 Corrosion protection

When fitting aluminum to other materials, contact corrosion must be avoided.

5.4 Installation

- Insert the first TremLock K-Zip profiled sheet into the clips with the large seam towards the gable.
- Zip up the large seam using the zipping machine so that the gable end channel can be attached and riveted. Here the zipping machine must be guided by hand.

x = Minimum distance 4" (100 mm) from gable end clip

1 = Aluminum blind rivet with stainless steel mandrel 5 x 8 mm

2 = Gable end channel

3 = Gable end clip

4 = 2 self-drilling screws stainless steel

SFS-SX6/6-S16-5.5 x 26 mm

or

2 threaded screws stainless steel

SFS-TDA-S-S16-6.5 x 16 mm

(predrilled with ø 4.5 mm)

Transitional area

If a TremLock K-Zip profiled sheet is roll-curved with several radii, a transitional area is created in which no clip may be placed (except a fixed point clip).

a) This transitional area can be safely estimated to be

- +/-12"—24" total (±/- 300 mm—600 mm total) if the two adjacent radii both have the same sign, or
- +/-24"—48" total (±/- 600 mm—1200 mm total) if the two adjacent radii have different signs, i.e. from concave to convex or vice versa.

b) Consult Tremco Technical Services for a more exact determination of this transitional area.

The edge of the roof must be reinforced immediately and secured with gable end clips. A description of the area of the roof edge can be seen under the description of the connections on page 38.

The fixed point must be established before the next profiled sheet is laid. This can be done in the area of the ridge, but it can also be done somewhere else on the TremLock K-Zip profiled sheet if thermal expansion makes this necessary.

5.5 Design of fixed points TremLock K-Zip aluminum clip / TremLock K-Zip composite clip

The fixed point prevents slippage of the profiled sheets and is the point of each TremLock K-Zip profiled sheet that is not subject to a change of length. Each TremLock K-Zip profiled sheet is to be secured at the fixed point against displacement.

If the fixed point is not located directly at the roof ridge, then the elongation of the TremLock K-Zip profiled sheets from the fixed point to the roof ridge must be taken into account when forming the covering of the roof ridge. Each TremLock K-Zip profiled sheet may have only one fixed point. Kinks in the TremLock K-Zip profiled sheet, fixed lighting elements, etc. are likewise fixed points and must be taken into account. No second fixed point may be utilized.

Fixed points are statically verified and are to be taken from the installation plan.

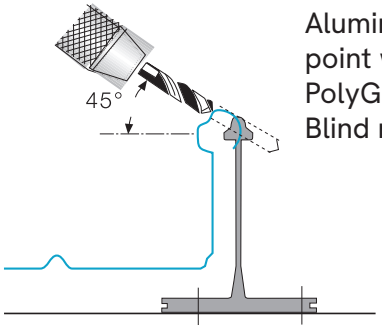

Aluminum clip Fixed point with Gesipa PolyGrip Aluminum-Blind rivet

Ø 4.8 x 10 K9,5

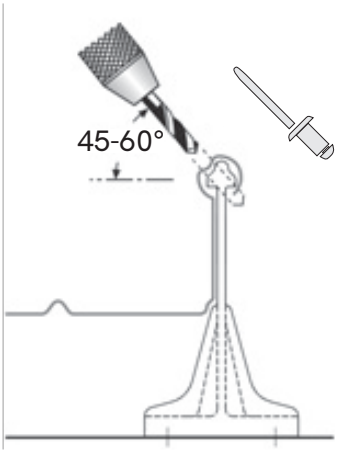

Composite clip
Fixed point with
Gesipa PolyGrip
Aluminum-Blind rivet

Ø 4.8 x 10 K9,5

A hole for the blind rivet is drilled through the small seam into the head of the clip at an angle of 45-60° degrees, the rivet is inserted and the swage head is covered by the large seam of the next profiled sheet.

Alternatively, the fixed point is manufactured by the insertion of bolts through the webs of the TremLock K-Zip and the fixed point clip. Sealing washers must be inserted on both sides (bolt head and nut).

If a composite clip is used for the fixed point, all drilling swarf must be removed from the profiles, since the composite clip is made of plastic-sheathed steel. Rust stains on the profiled sheets are thus avoided. For the further installation of the roof surface, the TremLock K-Zip profiled sheets are placed with the large seam on the small seam, aligned to the eaves and only then pressed into the next row of clips.

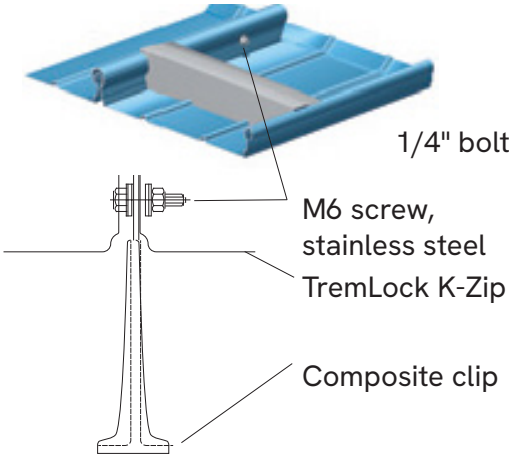

The sheets must be zipped immediately after laying

Zipping can be performed in any direction on sheets without transverse joints. In areas where the TremLock K-Zip profiled sheets have overlaps e.g. in the area of skylights, joints, etc. ensure that the zipping machine always runs in the direction of the slope over the overlaps. The diagrams below show the arrangement of the sealing and the connecting elements in the case of overlapping joints (excess silicone should be removed immediately).

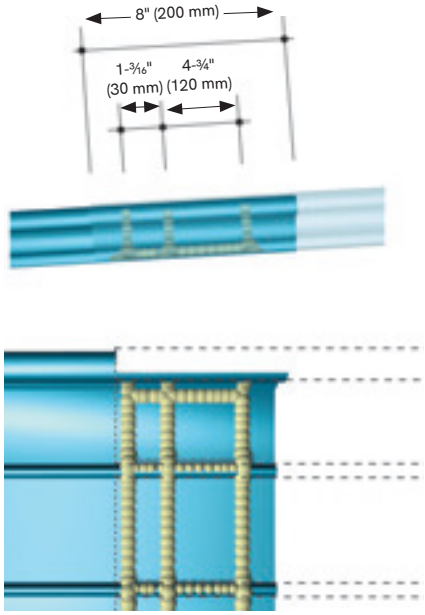

Sealing scheme

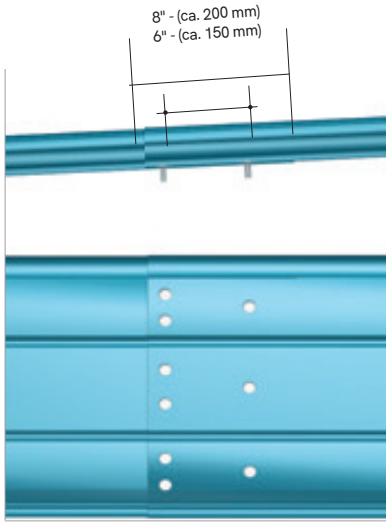

Rivet arrangement

Seam filler

3/4"

It is recommended that the seam filler is inserted 3/4" (20 mm) from the sheet end before the next TremLock K-Zip sheet is laid.

Sheet thickness	Final seam dimensions
1/32 to 3/64" (0.7 to 1.0 mm)	3/4" (approx. 20 mm)
3/64" (1.2 mm)	7/8" (approx. 22 mm)

5.6 Zipping procedure

A precondition for reliable load-carrying capacity, walkability and even the function of a TremLock K-Zip roof and wall system is that the seams are mechanically zipped by a special tool, the zipping machine. This can be hired from Tremco, and is also available for purchase. It is necessary to ensure that the small seam engages in the head of the clip, since otherwise the zipping can be faulty, and proper sliding in response to thermal expansion is also not guaranteed. For safety reasons, the TremLock K-Zip profiled sheets must be zipped immediately after laying to achieve the necessary composite effect to ensure correct load bearing capacity and accessibility.

Please note:

A special set of operating instructions is available on how to use the zipping machine.

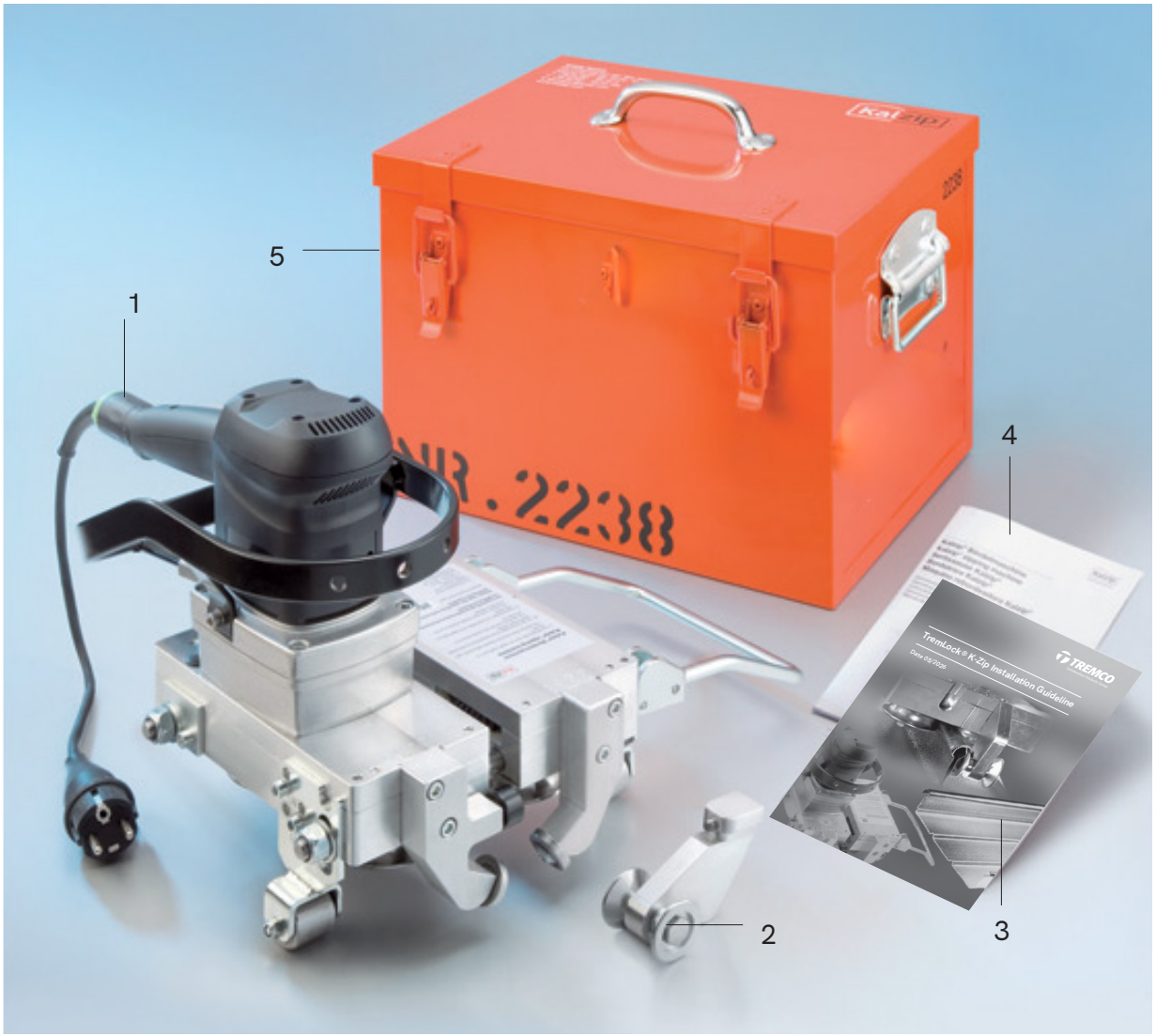

1. Zipping machine
2. Unzipping device (only in connection with the zipping machine)
3. TremLock K-Zip installation instructions
4. Operating instructions for the zipping machine
5. Portable steel box

6.0 Connections

6.1 Ridge

6.1.1 Upward fold

The end of the profiled sheet should be folded upwards at an angle of approx. 45° using the folding tool. When doing this, ensure that the correct tool is used for the corresponding TremLock K-Zip profile. 6.1.2 Ridge closure

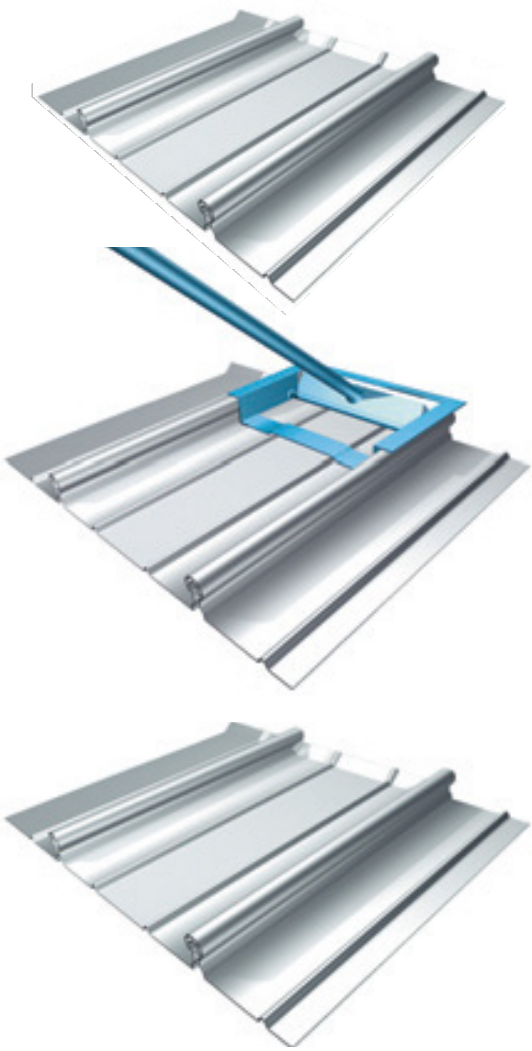

6.1.2 Ridge closure

When the sheet end has been folded upwards, the ridge closure should be inserted into the profiled sheet and secured on the seam webs by means of aluminum rivets using a Nirosta mandrel. Ensure that the rear edge of the ridge

Ensure that the rear edge of the ridge closure has a distance of ≥ 4" (100 mm) to the upward fold.

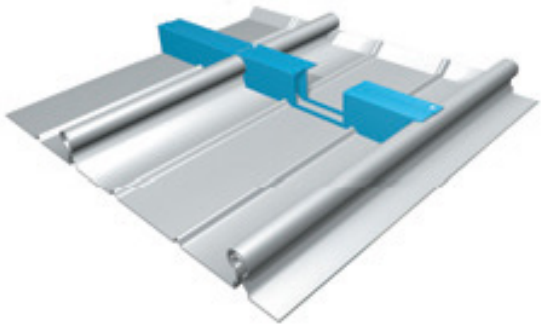

6.1.3 Closure filler

The closure filler is inserted below the rear edge of the ridge closure, whereby the design of the ridge closure creates a contact pressure in order to ensure its function as a wind break.

When the fixed point is positioned in the center of the TremLock K-Zip profiled sheets, sliding elements should be used to accommodate longitudinal expansion. These also serve to secure the ridge cover.

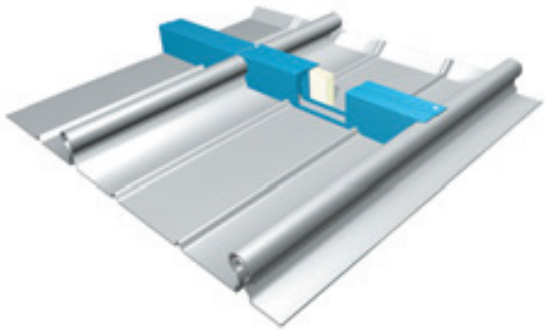

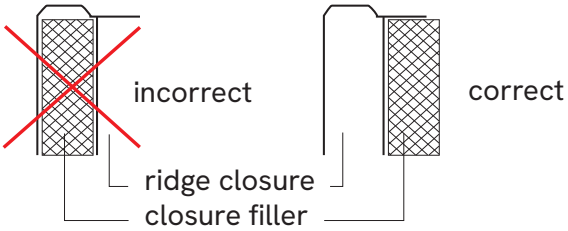

6.1.4 Spacer section / sliding element

To support and stabilize the ridge plates, the aluminum spacer section should be installed so that the upper supporting side is aligned flush with the end of the profiled sheets and the lower side is secured on the seam webs using aluminum rivets.

If the fixed point is not positioned in the ridge area, a flexible ridge design is achieved used the sliding elements.

6.1.5 Ridge cover plate

The ridge cover plates should only be attached in the center or in the third sections of the ridge closures. Attachment in the area of the seam webs should always be avoided.

The ridge cover plates must not be connected to each other in the area of the joints. A butt jointed design with cover plates is recommended to allow for longitudinal expansion.

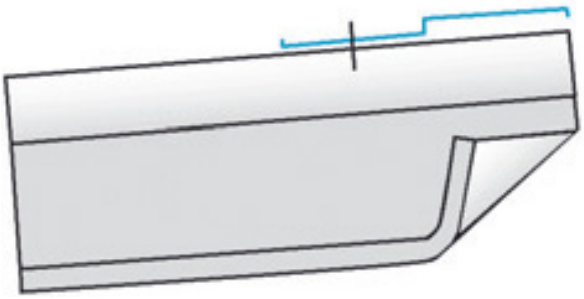

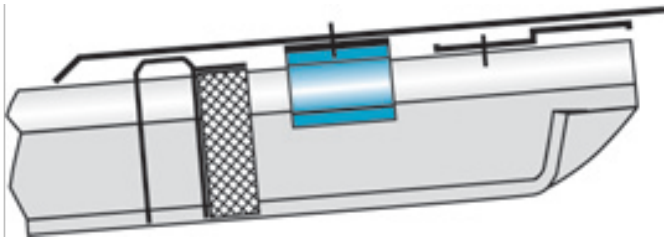

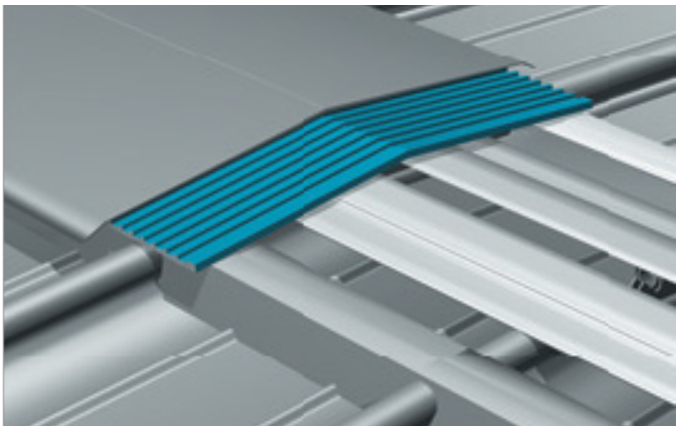

Alternative: Butt jointed sheet with foldover.

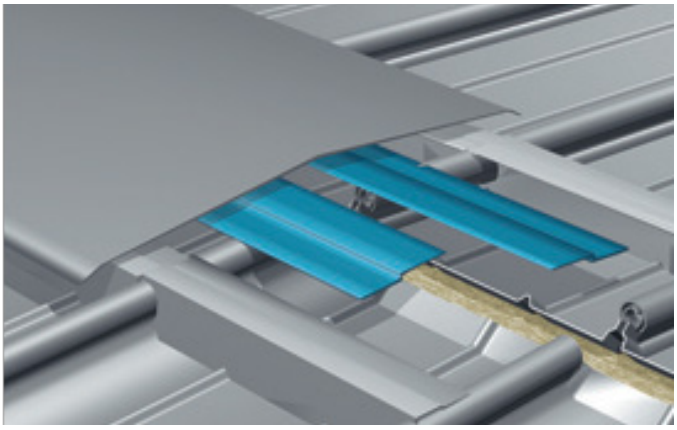

Ridge on shed roof

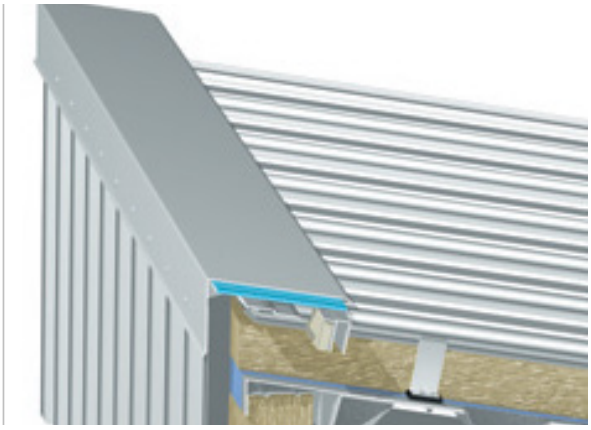

6.2 Gable end

6.2.1 Gable end channel

The large seam web must be closed with the zipping machine. The gable end channel is placed in position, pressed against the outer seam edge, then fixed in a horizontal manner and attached in the center of the seam rib by means of aluminum rivets at a distance of approx. 20" (500 mm). The long side faces towards the roof side.

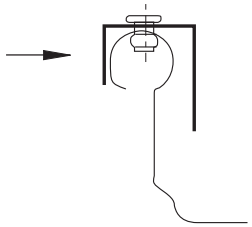

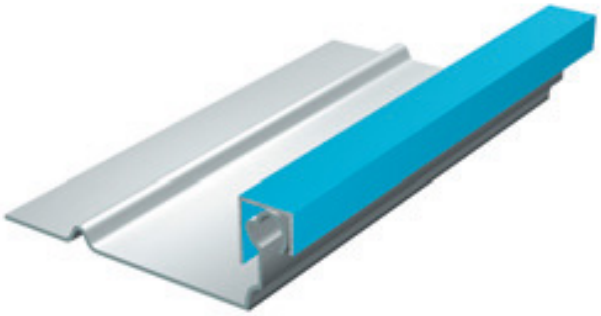

6.2.2 Gable end clip

The gable end clip is placed on the clamping profile in the area of the clips and attached onto the side of the clip shaft. In the case of connections to rising wall surfaces, the holes in the clip seam must be predrilled, whereby the gable end clip with holes predrilled in the factory can be used as a template.

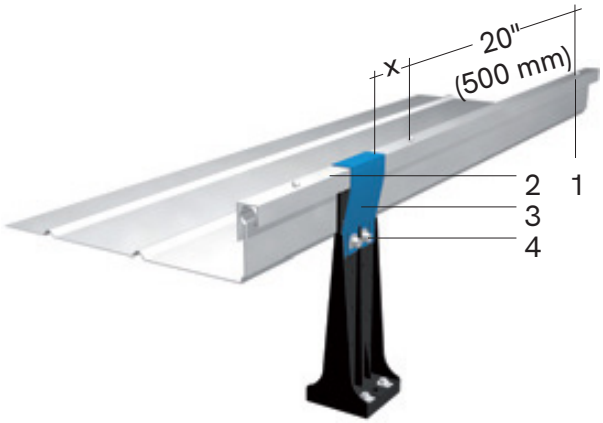

1. = Minimum distance 4" (100 mm) from gable end clip
2. = Aluminum blind rivet with stainless steel mandrel 5 x 8mm
3. = Gable end channel
4. = Gable end clip
5. = 2 self-drilling screws stainless steel SFS-SX6/6-S16-5.5 x 26 mm or 2 threaded screws stainless steel SFS-TDA-S-S16-6.5 x 16 mm (predrilled with ø 4.5 mm)

6.2.3 Gable end support rail

The gable end support is hooked into the side of the gable end channel which faces the roof surface and pressed over the edge of the gable end clip until it locks in place.

6.2.4 Cover plate

The gable end cover plates flashing should be attached on the gable end support and if necessary on the gable end profile. They must not be connected to each other in the area of the joints. A butt jointed design with splice plates is recommended. Alternatively, gable ends are also equipped with TremLock K-Zip transition sheets appropriate to the particular type of TremLock K-Zip used. As the transition sheets are bent, they can have a maximum length of 20" (6.00 m). Joints are welded in the case of low roof pitches. With roof pitches which are >1:12 (> 5°) the joints can also be sealed.

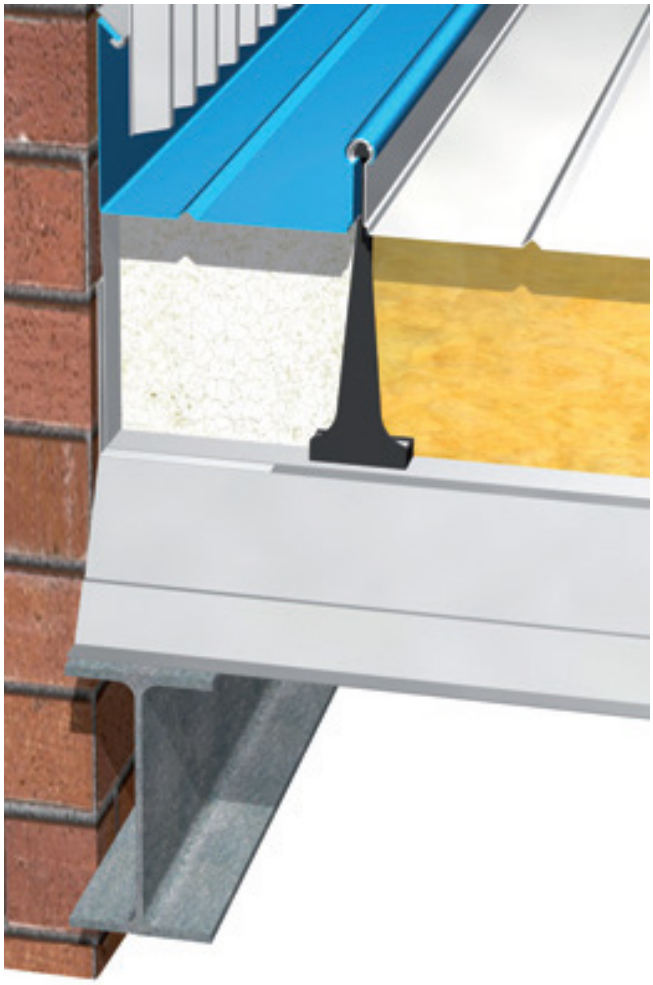

Transition Sheets

Transition sheets are only available with a large seam. If necessary, a “small seam” can be created by forcing down the large seam.

6.3 Eaves closure and static edge reinforcement

6.3.1 Gutter overhang

The following gutter overhang should be observed for TremLock K-Zip profiled sheets:

TremLock K-Zip sheet length	gutter overhang
up to 65' (20.00 m)	2-9⁄32" (60 mm)
up to 100' (30.00 m)	2-¾" (70 mm)
up to 130' (40.00 m)	3-3⁄32" (80 mm)
up to 164' (50.00 m)	4" (100 mm)

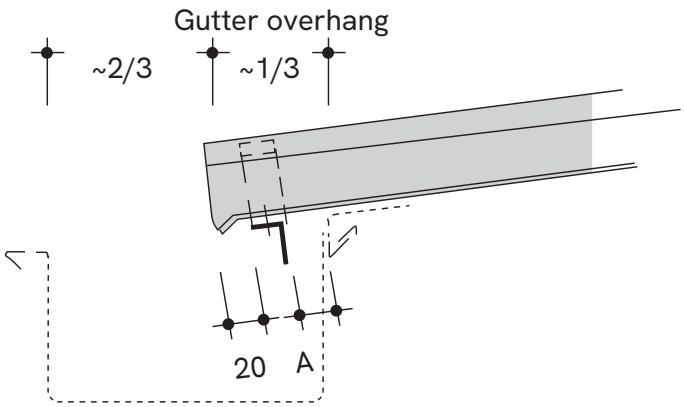

A = possible movement 13/32" / 10' (1.0 mm/m)
TremLock K-Zip sheet

6.3.2 Drip angle

For structural integrity, the drip angle is essential.

It should be temporarily held in the area of the gutter overhang of the TremLock K-Zip profiled sheets by means of clamps or locking pliers. Attachment then takes place from above by means of aluminum rivets.

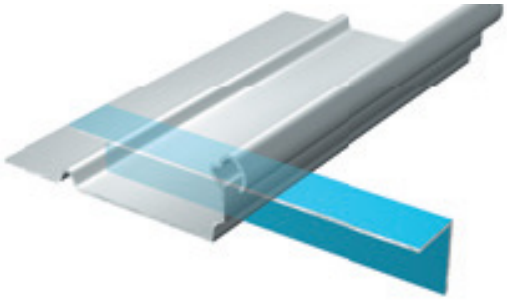

6.0

Rivet arrangement for installation of the drip angle

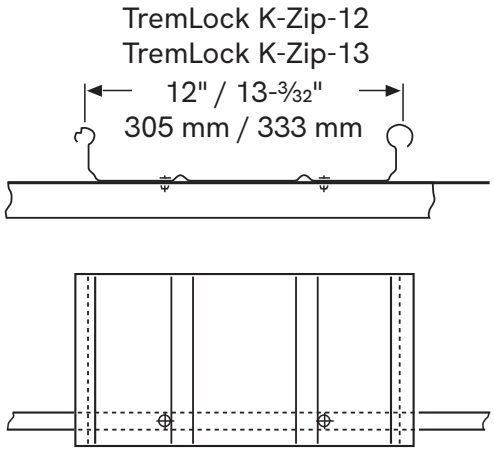

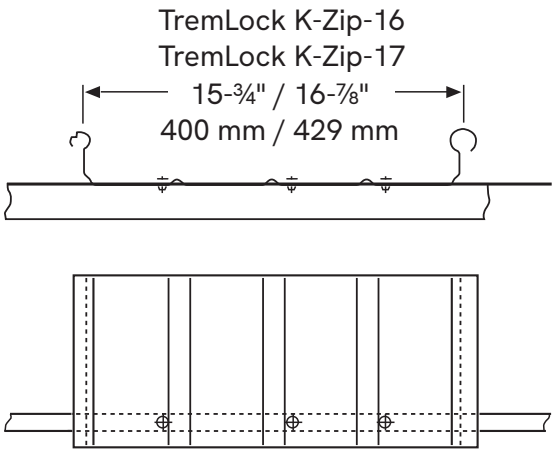

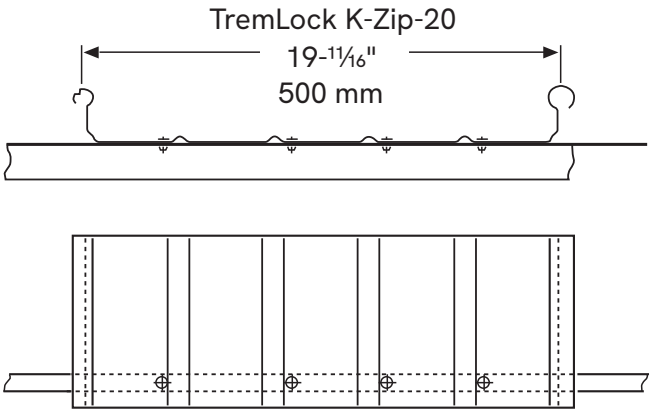

When the TremLock K-Zip projects over the first clip on the roof edge by more than 10" (250 mm), riveting must be carried out in each rib of the bottom sheet.

6.3.3 Folding

Follow installation of the drip angle, the ends of the TremLock K-Zip profiled sheets should be folded using the eaves folding tool. Always ensure that the correct tool is used for the corresponding TremLock K-Zip profile used.

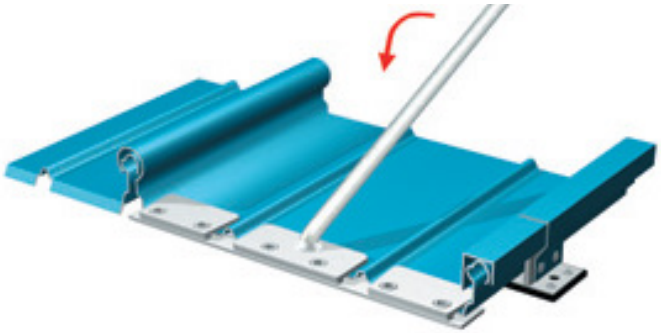

6.3.4 Sealing the eaves

With roof pitches < 1:12 (< 5°) it is essential to seal the eaves using sealing tape and seam fillers.

Seam fillers are not necessary with roof pitches > 1 :12 (< 5°).

With roof pitches > 2:12 (< 10°) the drip angle can be installed without the eaves seal.

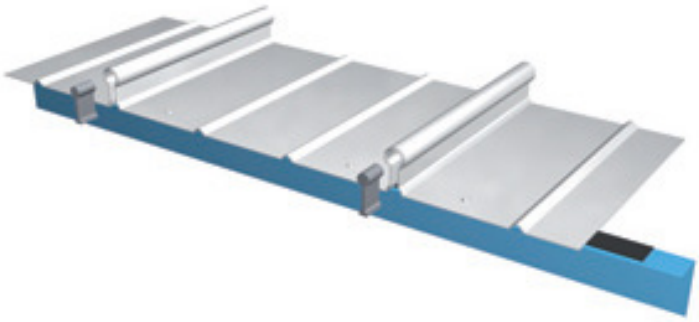

7.1 Vents

After laying the TremLock K-Zip sheets, cut out the bottom plate. Max. diameter (see below) if installed in the center of a sheet. Minimum 6" (75 mm) wide gutters clearance are left on each side.

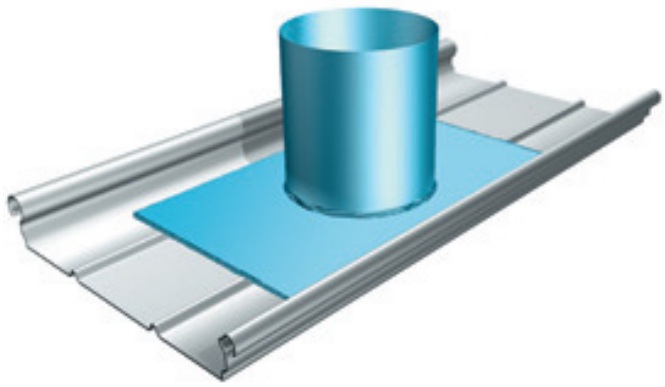

Weld aluminum vents into position

Alternative:

Prefabricated aluminum vent welded to a short TremLock K-Zip sheet is sealed into the roofing area by using silicone sealant and blind rivets. (See diagrams on page 33 “Sealing scheme” and “Rivet arrangement.”)

7.2 Fall arrest systems

The general regulations stipulated by the building authorities, professional trade associations, etc. must always be observed. An installation plan is required in which all dimensions, details and materials to be used are stated. The manufacturer’s instructions must always be observed and followed.

7.3 Walkways / steps

Special systems consisting of steps, access grids and corresponding brackets are used which are attached to the seams. Always ensure that the thermal movement possibilities of the TremLock K-Zip are not hindered. Walkways must be accordingly fitted with joints. You will find further information about this product in the corresponding data sheet.

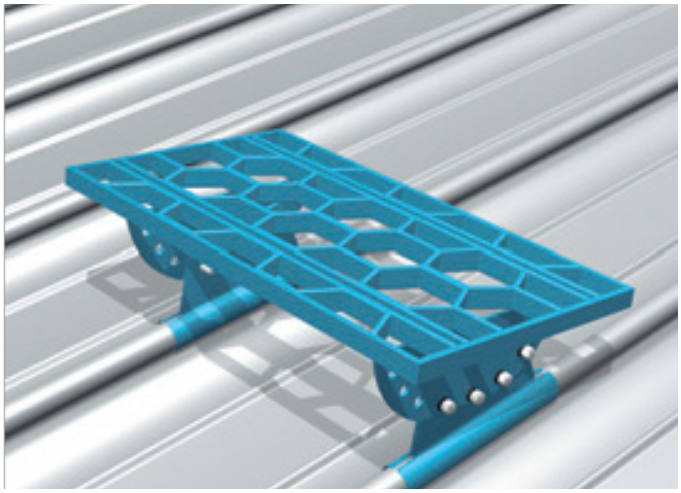

Trittstufe

7.4 Solar systems

Solar systems are attached to the seams by means of clamps. The position and quantity of clamps are given in the statics or installation plan of the systems. The hexagonal nut of the clamps is tightened to a torque of 4.5 ft-lb, in order to prevent the nuts from being over-wound and the seams from being damaged.

7.5 Seam clamps (stainless steel cable clips and seam clips)

Seam clamps or seam clips are used for fastening accessory components to TremLock K-Zip profiled sheets without making any perforation. The clips are placed, open, on the seam, after which the clamping screw is tightened to a torque of 4.5 ft-lb. It is important to note that once they have been tightened, the seam clamps can no longer be adjusted or moved, otherwise they will lose their clamping capacity. In practice this means that the clamping screws are not tightened with the torque of 4.5 ft-lb until the accessory components (e. g. frames for solar installations) have been fitted into the seam clamp. If, for some reason, it is necessary to change the position of the seam clamps, the clamping screws must be tightened up again.

Cable clip
Stainless steel

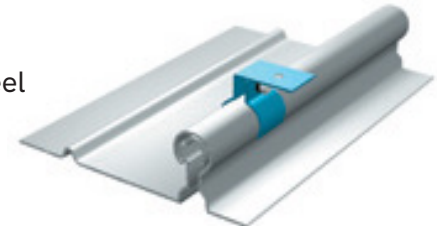

Seam clip
Stainless steel

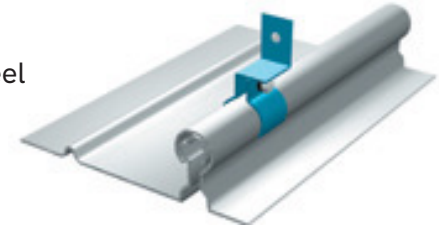

Seam clip
Aluminum

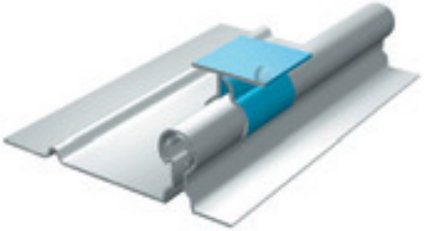

8.0 Welding · cutting · bending

8.1 TIG Welding

TIG welding is the most common method of welding aluminum. Welding can take place either at the construction site or in the factory. SG-AlSi5 is recommended as the filler material.

8.1.2 Welding preparation

The sheets which are to be welded must be clean, dry and free from grease. In conditions of strong wind and rain, weather protection should be used if required. Before welding takes place, coated sheets should have the coating removed in small area of 3/4" to 1-¼" (20 to 30 mm). Butt joints should be avoided if possible. It is better to allow the sheets to overlap slightly 3/8" to 3/4" (10 to 20 mm). If this is not possible, a backing strip made from non-coated aluminum can be placed underneath.

In order to ensure position stability during welding, the joints must be supported (e.g. rigid thermal insulation). The site fire department should be informed before welding takes place

8.2 Welding backing strip

In the case of substructures which are temperature-sensitive or could set on fire, the substructures must be protected to prevent fire and damage. Here, a strip of TremLock K-Zip welding backing strip is placed under the weld joint and fixed to prevent movement. You will find further information about this product in the corresponding data sheet.

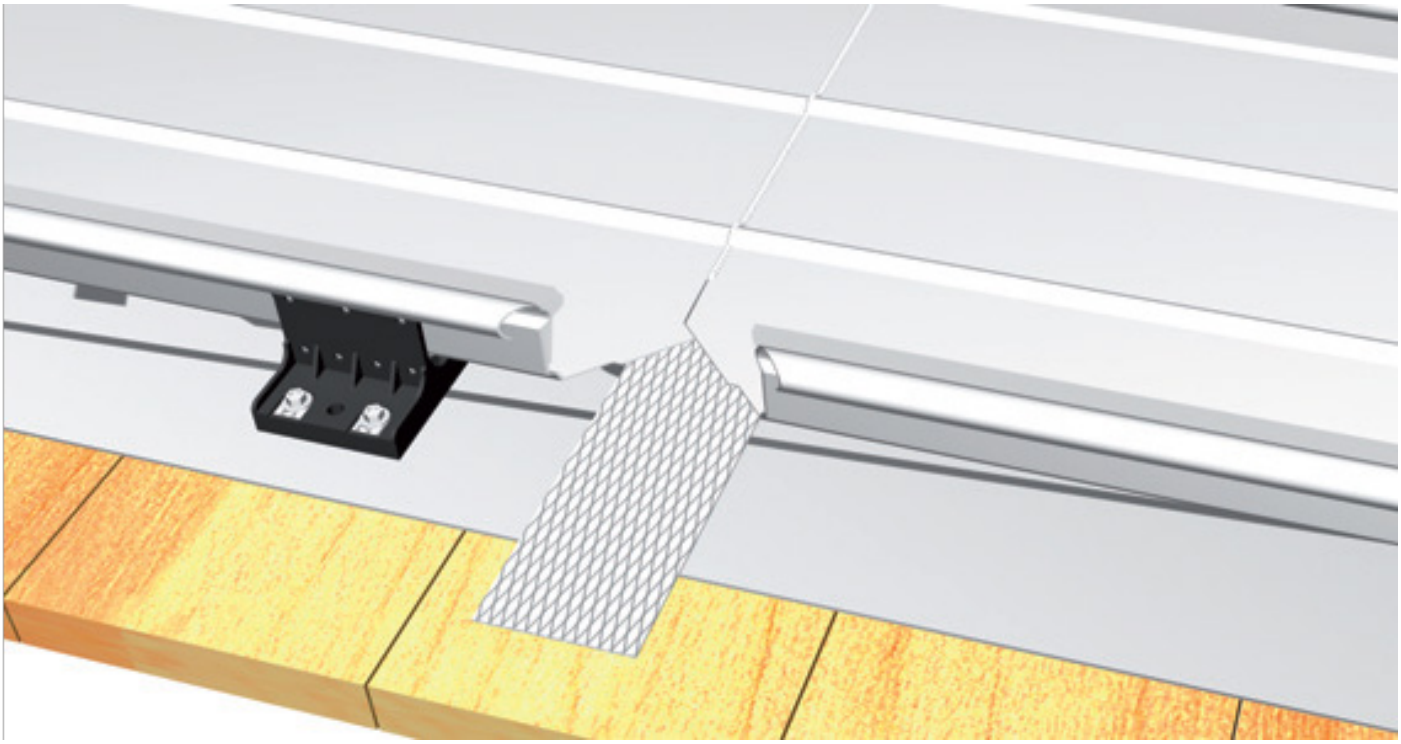

Welding backing strip

8.3 Cutting

In the case of all procedures, suitability for the respective purpose should be checked by carrying out a test cut. The burrs should be removed following cutting. Caution: risk of injury.

8.3.1 Cutting and sawing

A hand-held circular saw with a hard metal blade with a coarse tooth pitch 5/16 to 3/4" (9 to 20 mm) or a nibbler are best suited. For cutting straight roof edges, etc. guide the hand saw along a straight edge. A large bow saw with a hard metal blade is suitable for cutting individual sheets.

8.3.2 Cut-off discs

Special cut-off discs suitable for aluminum sheets are used for cutting out openings and for cutting individual profiled sheets (e.g. FT24A TOP from Rhodius).

8.4 Folding

Minimum radii must be observed in accordance with material quality and finish.

TremLock K-Zip sheets and flat sheets of coated coiled material are generally manufactured from 3/4 hard material. Special flat sheets are generally 1/2 hard.

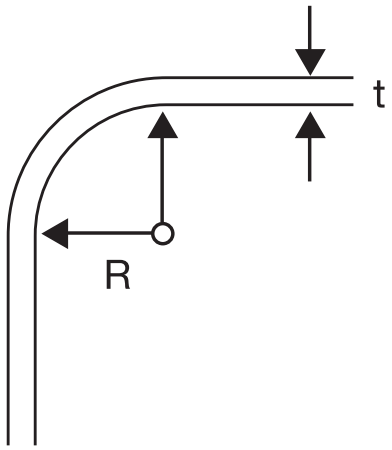

Minimum internal radius

Surface	1/4 hard	1/2 hard	3/4 hard
Stucco-embossed mill finish	2 x t	3 x t	4 x up to 6 x t
Coil coating		generally 5 x t	

- Mark with a soft pen, do not use marking tools.
- When working with color coated material, mask the bending tool or work with protective film.

9.0 Useful hints and advice

9.1 Installation template for installing clips

An installation template can be used to simplify clip installation. It consists, for example, of a metal strip with a length of 10 to 15' (3 to 5 m). Notches are punched in the strip in accordance with the planned clip spacing. The first clip rows are measured and attached. The template is then placed on the existing clips and aligned. The new clips are positioned and directly attached without marking out.

The template can be used for purlin roofs, rafter roofs, flat roofs and curved roofs.

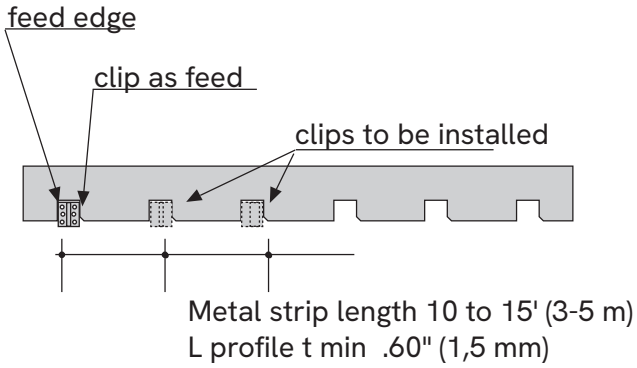

Cover width = installation dimension
e.g., 15-¾" (400 mm), 13-3⁄32" (333 mm), etc.

Installation template

Example: purlin roof

The roof is measured and the first two rows of clips are positioned on the gable end according to the measurement. The installation template is then used to continue installation in accordance with the plan.

Example: rafter roof

The roof is measured and the first rows of clips are positioned on the gable end according to the measurement. Depending on the plan, the clips are installed on a trapezoidal profile seam in each 4th, 5th , etc. TremLock K-Zip profiled sheet. Accordingly a specified clip rows must be installed in correspondence with the given measurement on the gable end. The template can then be used to continue installation. The corresponding gaps are marked out on the template.

9.2 Preassembly of the clips on hat channel profiles

If the clips are attached to spacer profiles, preassembly can be carried out in the factory.

9.3 Storing long sheets

It is difficult to store long sheets at a sloping angle. To prevent the accumulation of water, boards should be placed under the center of the sheets to create a slightly sloping angle.

9.4 Installation with several installation groups

Only with flat roofs, not with curved sheets.

In order to be able to work with two or more assembly groups at the same time, installation can begin at several positions. The roof is firstly measured and the clips installed. It is important that the measurements are carried out extremely carefully. The direction of installation is the same at all positions.

The first group then begins on the gable end and a second group at any point on the roof. This second group begins so that a large seam is laid loosely on the clip. This seam is not zipped but is instead secured with gable end clips to prevent it lifting off. Installation can then take place as normal. When the first group comes to the interface, the first sheet of group 2 is raised so that the clip is once again free, the small seam of the last sheet of group 1 is placed on the clip, the large seam of the raised sheet is placed on top and zipped. Installation can begin at as many positions as required using this method.

9.5 Protection when drilling through U disc

When drilling sheets, the drill can very easily slip through and damage the surface of the sheet. The risk of this occurring can be greatly reduced by placing a distance washer on the drill. In this way, the drill chuck cannot reach the sheet.

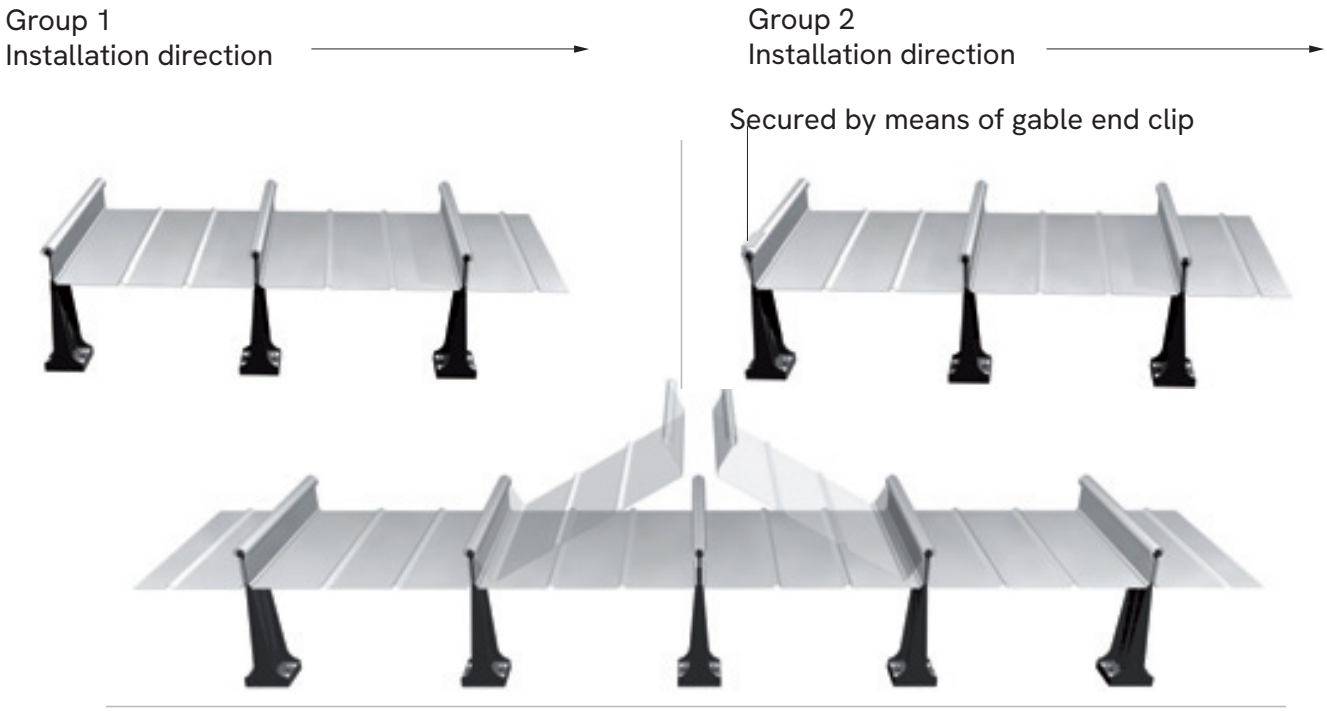

Installation with several assembly groups

9.6 Roof projections with clip bars

The clip bars should be installed exactly as specified in the plan. The clip bars must be precisely aligned so that they do not tilt into the seams.

Maximum roof projection with clip bars 5' (1.5 m).

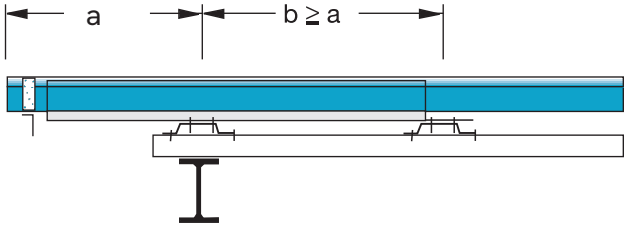

hole pattern 2

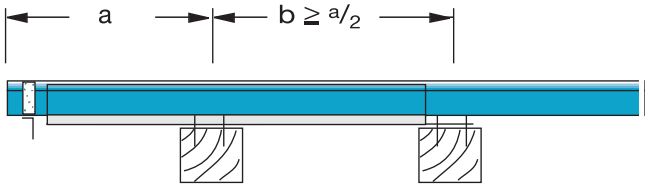

hole pattern 2

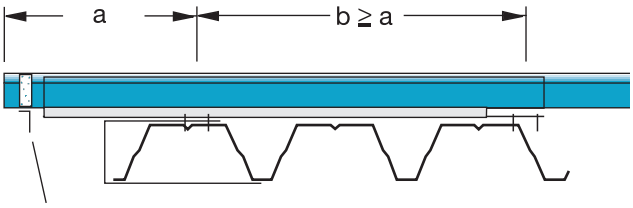

Drip angle as lateral stiffener

hole pattern 2

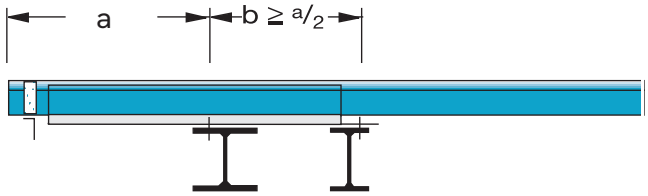

hole pattern 1

hole pattern 1

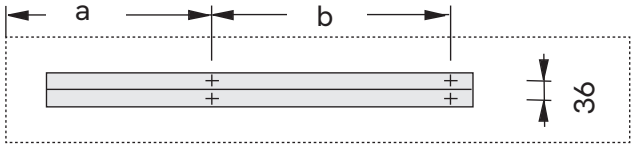

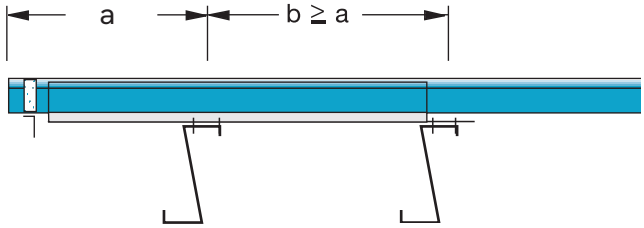

hole pattern 2

hole pattern 2

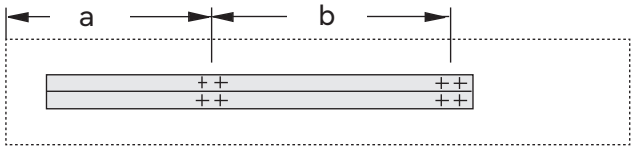

b = fixing distance depends on substructure

9.7 Roof projections without clip bars

Follow the specifications outlined in the plan precisely. The max. roof projection without clip bars is 3' (1.00 m). However, this is on the condition that the TremLock K-Zip sheet length is at least 15' (5.00 m). Please refer to Table 9.8 on Page 52 for precise values.

9.7.1 Requirements for installation

In this kind of design a short clip piece can be installed within the seams to secure the gutter support. The clip is attached by using either 2 rivets in the clip head or 2 screws. As there is no connection to the substructure, the TremLock K-Zip profile sheets are able to expand freely. With a sheet length of greater than 40' (12 m) the downpipe must be designed to accommodate the elongation of the tracks, e.g. by means of moveable pipe laps. The sheets must be connected with the eaves angle in each case.

Please note:

The roof projections are not accessible during installation or before the seams are zipped.
Please observe and follow all instructions relating to safety measures and fall arrest equipment. Roof projections should be fitted with clip bars in the case of values above 3' (1.0 m) and up to 5' (1.5 m).

The roof projection (a) is calculated from the spacing between the first clip at the roof edge and the outer edge of the TremLock K-Zip.

When the TremLock K-Zip profile sheets are visible from below, it is advisable to always use load spreading equipment when gaining access.

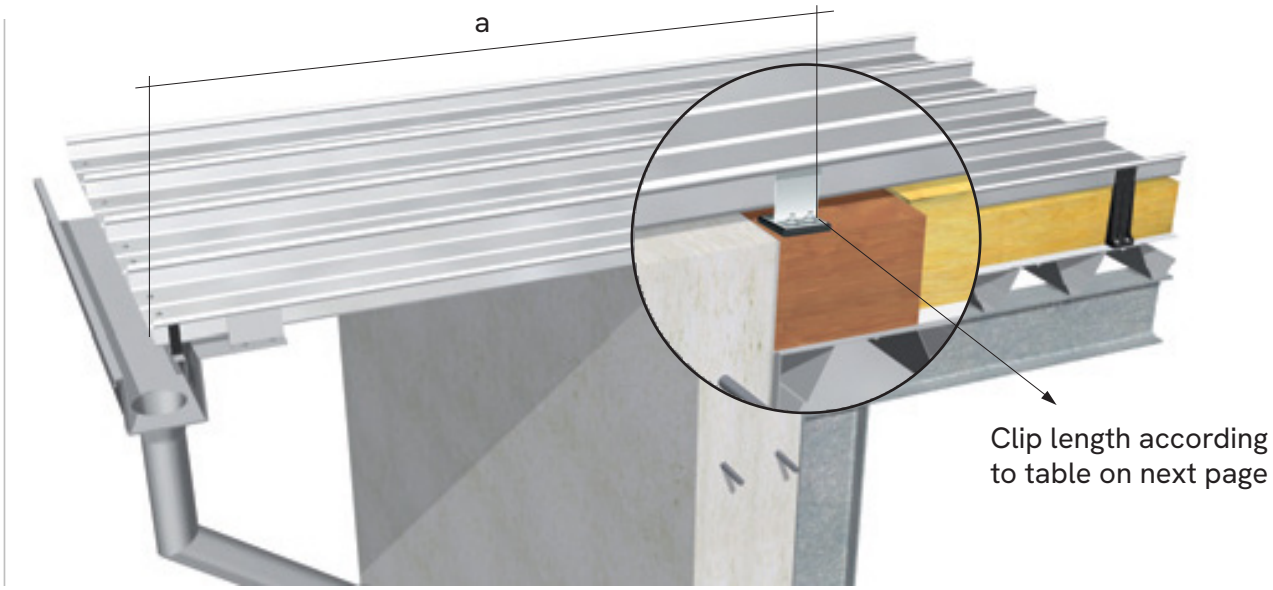

9.8 Roof projections constructed from TremLock K-Zip profile sheets

Line		Wind suction psf (kN/m2)		
		30 (1.50)	40 (2.00)	50 (2.50)
	TremLock K-Zip type	Roof projection (a) in feet (meters)		
1	TremLock K-Zip-17 16-⅞" x 1/32" (429 mm x 0.9 mm)	2.6' (0.80 M)	2' (0.60 M)	1.5' (0.50 M)
	Clip length	s	d	d
2	TremLock K-Zip-17 16-⅞" x 3/64" (429 mm x 1.0 mm)	3' (1.00 M)	2.6' (0.80 M)	2' (0.60 M)
	Clip length	s	d	d
3	TremLock K-Zip-12 12" x 1/32" (305 mm x 0.9 mm)	3' (1.00 M)	3' (1.00 M)	2.9' (0.90 M)
	Clip length	s	s	d
4	TremLock K-Zip-12 12" x 3/64" (305 mm x 1.0 mm)	3' (1.00 M)	3' (1.00 M)	3' (1.00 M)
	Clip length	s	s	d
5	TremLock K-Zip-13 13-3/32" x 1/32" (333 mm x 0.9 mm)	3' (1.00 M)	3' (1.00 M)	2.6' (0.80 M)
	Clip length	s	s	d
6	TremLock K-Zip-13 13-3/32" x 3/64" (333 mm x 1.0 mm)	3' (1.00 M)	3' (1.00 M)	3' (1.00 M)
	Clip length	s	s	d
7	TremLock K-Zip-16 15-¾" x 1/32" (400 mm x 0.9 mm)	3' (1.00 M)	3' (1.00 M)	2' (0.60 M)
	Clip length	s	d	d
8	TremLock K-Zip-16 15-¾" x 3/64" (400 x 1.0 mm)	3' (1.00 M)	3' (1.00 M)	2.9' (0.90 M)
	Clip length	s	d	d

d: first clip at the roof edge in double length

s: first clip at the roof edge in standard length and in aluminum

9.9 Removing dirt

Washing with warm water will usually be adequate. Detergent or special cleaning agents can be helpful, and should be used according to the instructions of the relevant manufacturer. Sponges or soft brushes – such as those used for washing cars – make suitable tools. The use of high-pressure cleaners creates a risk that water will penetrate into the roof space and into the supporting construction. Such devices should therefore only be used with great care. Rinsing off with warm, clean water is essential. The cleaning process must always work from the top to the bottom.

Natural-finish surface:

Use an abrasive agent with a pH-value of between 5 and 8 abrasive cleaning e.g. fiber fleece. Abrasion traces will be visible with abrasive cleaning. The surface will be brighter as the oxide coat darkens and the new coat will be bright metallic at first.

When using special cleaning agents, make sure that they are ecologically compatible. Always rinse off with water.

Steam-jet cleaning must be performed by a specialized company.

Coated surface:

Use special non-abrasive, biodegradable cleaner compatible with the coating system and rinse thoroughly after cleaning.

Always work with extreme care since major color differences may occur.

It is often worthwhile delaying the cleaning process because weathering and dirt accumulation will reduce color differences.

Good results are achieved with a chemically neutral (pH value between 5 and 8)" 5% soap solution, using a high-pressure cleaner.

Organic solvents, acid or alkalis, cleaning agents that contain chlorine or that are not neutral, abrasive agents such as coarse scouring agents, dry or hard brushes should not be used.

10.0 Special tools

The special tools listed below should be used for installing TremLock K-Zip roof and wall systems.

Please note:

A special set of operating instructions is available on how to use the zipping machine.

10.1 Tools and accessories

Tools	Use
Zipping machine 110/230 volts, 50/60 Hertz 1 roller set for TremLock K-Zip .027 to 3/64" (0.7 to 1.0 mm), packed in portable steel box	For mechanically closing the TremLock K-Zip profiled sheets
Unzipping device	Unzipping TremLock K-Zip sheets (can only be used together with zipping machine)
Additional roller set	Type L for closure rail and translucent sheets Type 1.2 for material thickness 3/64" (1.2 mm)
Hand closing tool	Closing sheet upstands by hand
Folding tool (available for all standard profiles)	Folding TremLock K-Zip sheets at the ridge
Eaves folding tool (available for all standard profiles)	Folding down TremLock K-Zip profiled sheets in the eaves area
Roofing pliers cranked or straight	Folding down small sheets

11.0 System components and accessories

TremLock K-Zip composite clip type E

The new TremLock K-Zip Generation connecting clip for fastening TremLock K-Zip aluminum profiled sheets minimizes thermal bridges, permitting a roof structure whose heat transfer rate is determined by the thermal insulation. The TremLock K-Zip Type E composite clip consists of a strong steel core enclosed in glass-fiber reinforced plastic.

Clip type	In combination with spacer cap (DK)	Height in inches (mm)	TremLock K-Zip-17/...w3	TremLock K-Zip-12,13, 16, 20/...w3
E 5		2-19/32" (66 mm)	not applicable	5/8" (16 mm)
E 20		3-3/16" (81 mm)	1-3/8" (35 mm)	25/32" (20 mm)
	E 20 + DK 10	3-9/16" (91 mm)	1-3/4" (45 mm)	1-3/16" (30 mm)
E 40		3-31/32" (101 mm)	2-5/32" (55 mm)	1-9/16" (40 mm)
	E 40 + DK 10	4-3/8" (111 mm)	2-9/16" (65 mm)	1-31/32" (50 mm)
E 60		4-3/4" (121 mm)	2-15/16" (75 mm)	2-11/32" (60 mm)
	E 60 + DK 10	5-5/32" (131 mm)	3-11/32" (85 mm)	2-3/4" (70 mm)
E 80		5-17/32" (141 mm)	3-23/32" (95 mm)	3-5/32" (80 mm)
	E 80 + DK 10	5-15/16" (151 mm)	4-1/8" (105 mm)	3-17/32" (90 mm)
E 100		6-11/32" (161 mm)	4-17/32" (115 mm)	3-15/16" (100 mm)
	E 100 + DK 10	6-23/32" (171 mm)	4-29/32" (125 mm)	4-5/16" (110 mm)
E 120		7-1/8" (181 mm)	5-5/16" (135 mm)	4-23/32" (120 mm)
	E 120 + DK 10	7-1/2" (191 mm)	5-11/16" (145 mm)	5-3/32" (130 mm)
E 140		7-29/32" (201 mm)	6-3/32" (155 mm)	5-1/2" (140 mm)
	E 140 + DK 10	8-9/32" (211 mm)	6-1/2" (165 mm)	5-29/32" (150 mm)
E 160		8-11/16" (221 mm)	6-7/8" (175 mm)	6-9/32" (160 mm)
	E 160 + DK 10	9-3/32" (231 mm)	7-9/32" (185 mm)	6-11/16" (170 mm)
E 180		9-15/32" (241 mm)	7-21/32" (195 mm)	7-3/32" (180 mm)
	DK 10 mm			
	DK 5 mm			

w3 = distance from TremLock K-Zip base to lower edge of clip foot base E

	Type	Size in inches (mm)

Clip bar

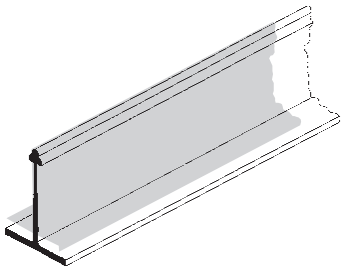

Supply lengths of 236' (6,000 mm)

L 10

L 25

L 100

L 140

Clip bar curved

Supply lengths of 236' (6,000 mm)

L 10

L 25

Fixed point clip bar including fastening holes

aluminum

Supply lengths of 4.68" (119 mm)

2.28" (58 mm)

L 10

L 25

L 100

L 140

Thermal barrier polyamide

suitable for fixed point clip bar

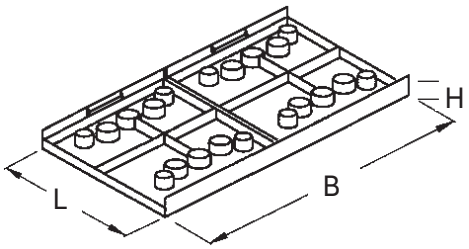

	L	B	H
DTK 5	4-¾" (121 mm)	2-15⁄32" (63 MM)	3/16" (5 mm)
DTK 15	4-¾" (121 mm)	2-15⁄32" (63 mm)	19/32" (15 mm)

Rotatable clip

Type	clip height	TremLock K-Zip-17 w4	TremLock K-Zip-12, 13, 16, 20 w4
D 10	2-9⁄16" (66 mm)	63/64" (25 mm)	not applicable
D 25	3-5⁄32" (81 mm)	1-9⁄16" (40 mm)	63/64" (25 mm)
D 100	6-⅛" (156 mm)	4-½" (115 mm)	3-29⁄32" (100 mm)
D 140	7-11⁄16" (196 mm)	6-3⁄32" (155 mm)	5-½" (140 mm)

w4 = distance between TremLock K-Zip lower surface and the bottom edge of DuoPlus rail.

Only available together with the DuoPlus rail.

Size in inches (mm)

Rotatable clip rail perforated

4-23⁄32" x 236" (120 x 6,000 mm) long

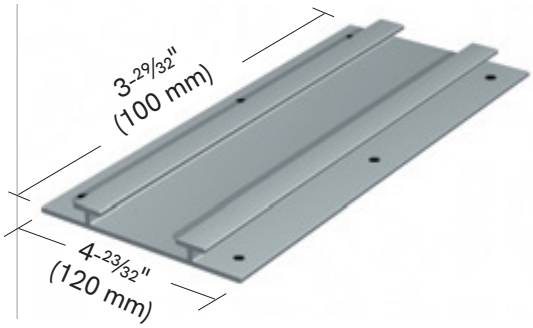

Gable end channel
aluminum mill finish

1-11⁄32" x 1-1⁄32" x 25/32" x 3/64" (35 x 27 x 20 x 1.5 mm)
236" (6000 mm) long

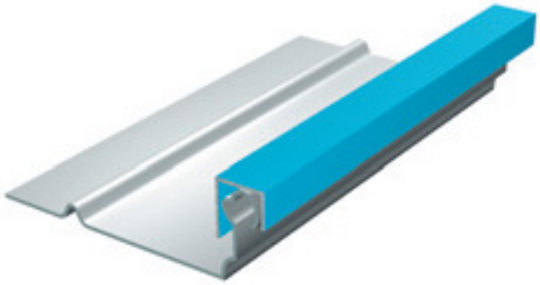

Size in inches (mm)

Gable end clip for TremLock K-Zip-12
Gable end clip for TremLock K-Zip-12, 13, 16, 17

l = 2.16" (58 mm)
2 holes, Ø 7

aluminum mill finish can be used for Al clip and composite clip

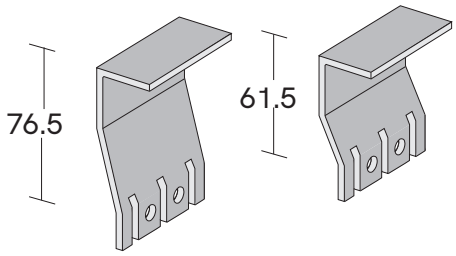

Gable end support rail
aluminum mill finish

2.36" (60 mm) wide

236" (6,000 mm) long

	Type	Size in inches (mm)
Sliding element aluminum mill finish		2.36" (60 mm) wide 2.36" (60 mm) long

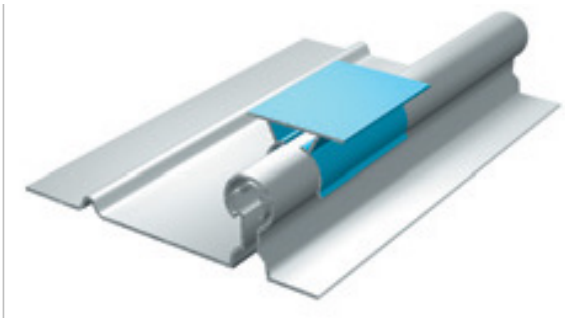

TremLock K-Zip flashing sheet with large sheet upstand

aluminum
236" (6,000 mm) long

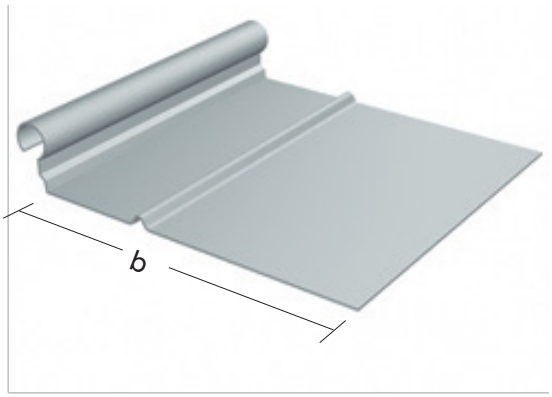

Stucco	Width
TremLock K-Zip-17/..	23-9/16" (599 mm)
TremLock K-Zip-12, 13, 16, 20/..	23-1/16" (586 mm)
colored	
TremLock K-Zip-17/..	on request
TremLock K-Zip-12, 13, 16, 20/..	on request
AluPlusPatina	
TremLock K-Zip-17/..	on request
TremLock K-Zip-12, 13, 16, 20/..	on request
AluPlusZinc	
TremLock K-Zip-17/..	19-½" (496 mm)
TremLock K-Zip-12, 13, 16, 20/..	18-29/32" (481 mm)

	Size in inches (mm)
Cable clip stainless steel 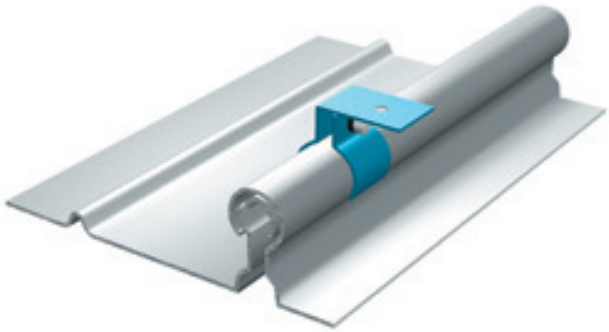	1-15⁄32" (38 mm) long 2.36" (60 mm) wide Hole diameter 21/64" (8.5 mm) for screw diameter 5/16" (8 mm)
Seam clip stainless steel 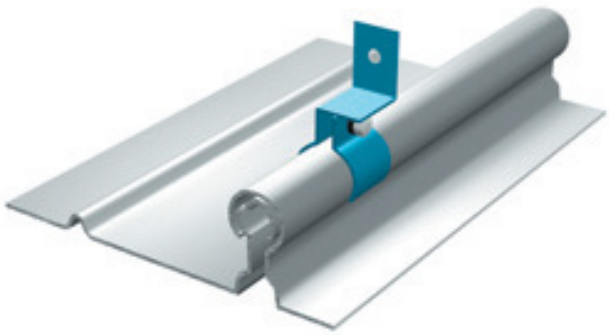	1-11⁄32" (35 mm) long 25/32" (20 mm) wide Hole diameter 17/64" (7 mm) for screw diameter 1/4" (6.5 mm)
Seam clip aluminum 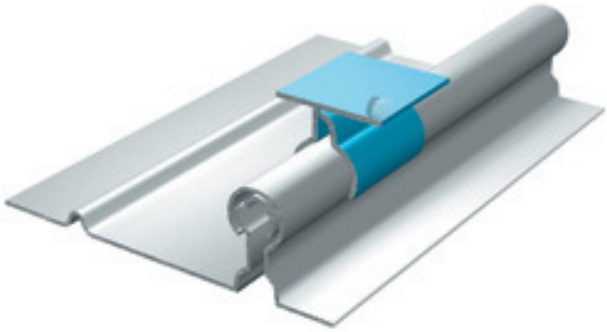	2.36" (60 mm) long 3-⅛" (80 mm) wide

	Type	Size in inches (mm)
Spacer profile aluminum mill finish		1-¾" x 15/64" x 1-¾" x 3/64" (45 x 6 x 45 x 1.5 mm) 236" (6,000 mm) long

Flat bar aluminum mill finish		55/64" x 15/64" (22 x 6 mm) 236" (6,000 mm) long

Ridge closure

aluminum

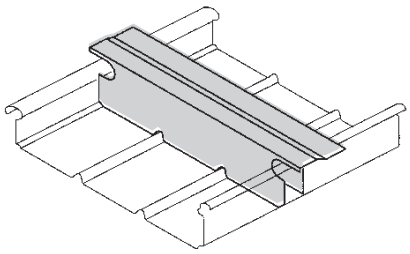

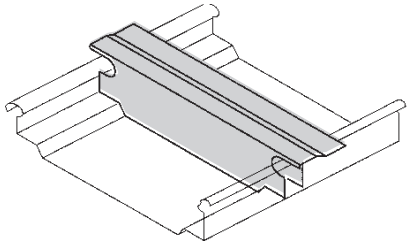

TremLock K-Zip-17 2" x 16-⅞" (50 mm x 429 mm

TremLock K-Zip-12 2-½" x 12" (65 mm x 305 mm)

TremLock K-Zip-13 2-½" x 13-3⁄32" (65 mm x 333 mm)

TremLock K-Zip-16 2-½" x 15-¾" (65 mm x 400 mm)

TremLock K-Zip-20 2-½" x 19-11⁄16" (65 mm x 500 mm)

Cut to size of TremLock K-Zip profile

Special ridge closure	As required
Arris ridge closure	As required

	Type	Size in inches (mm)
Closure filler cellulose polyethylene	TremLock K-Zip-17	2" x 16-⅞" (50 mm x 429 mm)
	TremLock K-Zip-12	2-½" x 12" (65 mm x 305 mm)
	TremLock K-Zip-13	2-½" x 13-3⁄32" (65 mm x 333 mm)
	TremLock K-Zip-16	2-½" x 15-¾" (65 mm x 400 mm)
	TremLock K-Zip-20	2-½" x 19-11⁄16" (65 mm x 500 mm)
	Cut to size of TremLock K-Zip profile	
	Special size	1,000 long

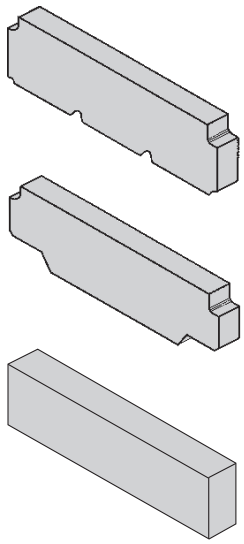

Seam filler cellular polyethylene	TremLock K-Zip-17	Cut to size of TremLock K-Zip profile
	TremLock K-Zip-12, 13, 16, 20	

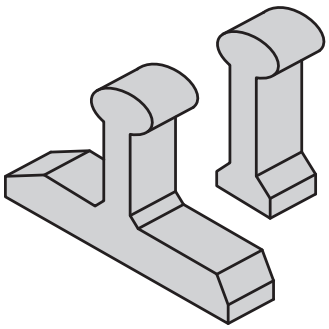

Drip angle aluminum mill finish	1-9⁄16" x 25/32" x 5/64" (40 x 20 x 2 mm) 236" (6,000 mm) long
	2-¾" x 1-5⁄32" x 5/64" (70 x 30 x 2.0 mm) 236" (6,000 mm) long

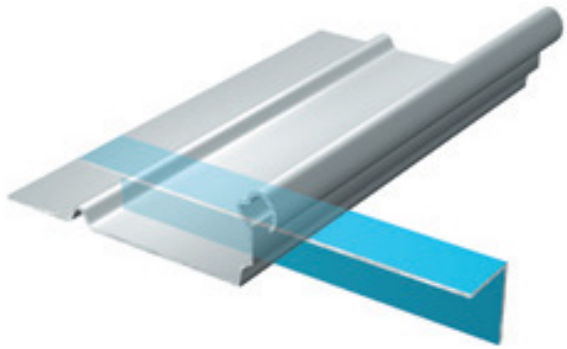

	Size in inches (mm)
Compressed adhesive tape precompressed adhesive on one side	3/8" x 19/32" (10 x 15 mm) Roll length: 492.12" (12,500 mm)

Expansion compensating ribbon aluminum vulcanized	3/64" x 15-11⁄32" (1.2 x 390 mm) 236" (6,000 mm) long

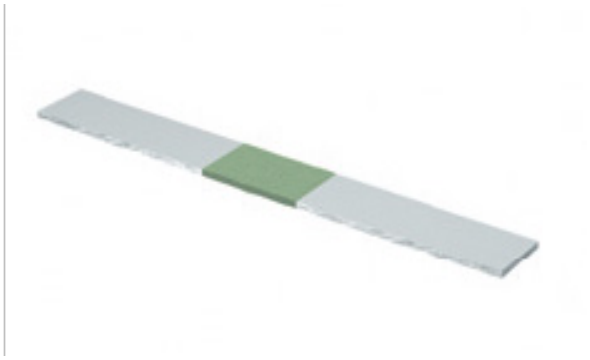

	Size in inches (mm)
Repair cover strip stucco embossed mill finish (not suitable for translucent sheets) aluminum, thickness 1 mm	236" (6,000 mm) long

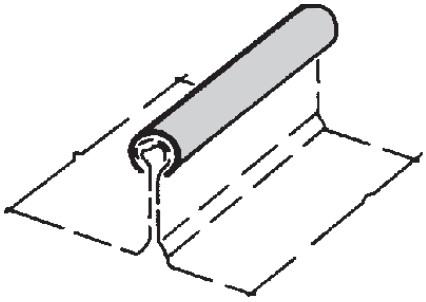

Omega profile extruded aluminum thickness 1.5 mm	236" (6,000 mm) long

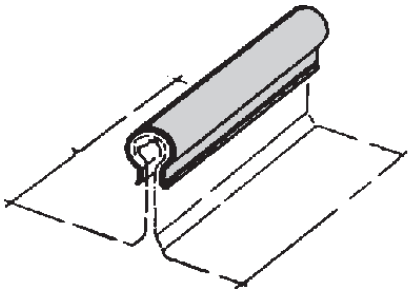

Comb-profiled jointing sheet aluminum mill finish	7/64" x 3-⅛" x 236" long (3.0 x 80 x 6,000 mm)

	Size in inches (mm)
TremLock K-Zip welding backing strip	5/64" x 3-29/32" 984" (25,000 mm) long

Pipe vent with rain cap and compensation for roof pitch	3-29/32" (100 mm) 4-29/32" (125 mm) 5-7/8" (150 mm) 7-27/32" (200 mm)

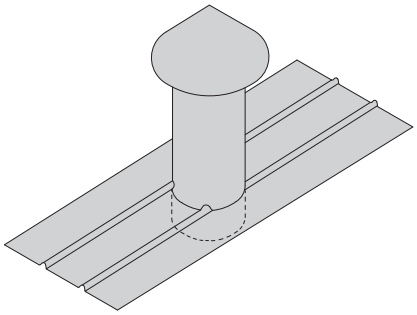

	Size in inches (mm)
TremLock K-Zip snow guard system 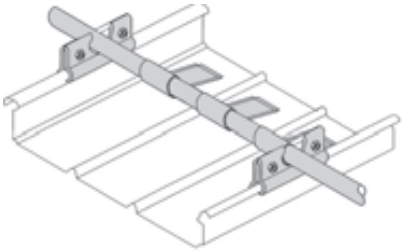	
Snow guard bracket aluminum, with 2 stainless steel screws M8 x 35 and nuts 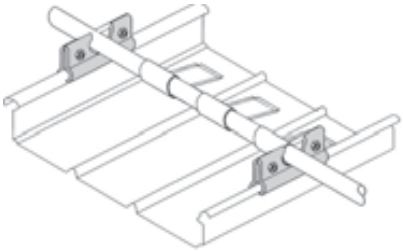	4-5⁄16" (110 mm) long
Snow stopper aluminum with stainless steel screw 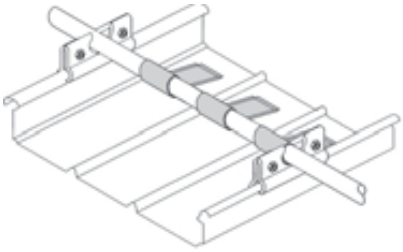	–
Aluminum snow guard pipe 32/2 mm 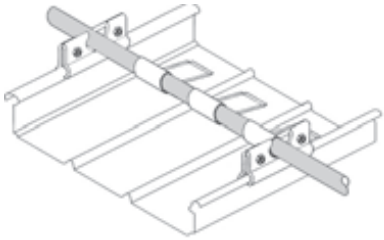	236" (6,000 mm) long

	Size in inches (mm)
Roof step – short grid cleanly cast and machined, including mounting bracket	18-3/32" x 9-13/16" (460 x 250 mm)

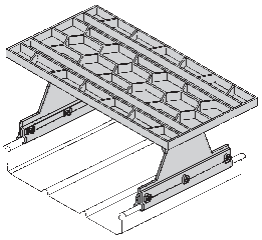

Roof step – standing grid cleanly cast and machined, including mounting bracket	31-15/32" x 9-13/16" (800 x 250 mm)

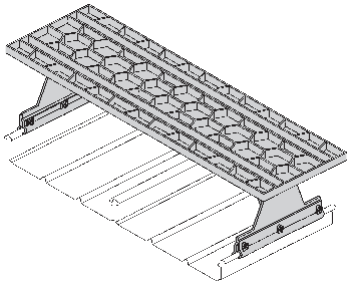

Aluminum continuous access grid with plug-in connections	59" x 9-13/16" (1,500 x 250 mm)

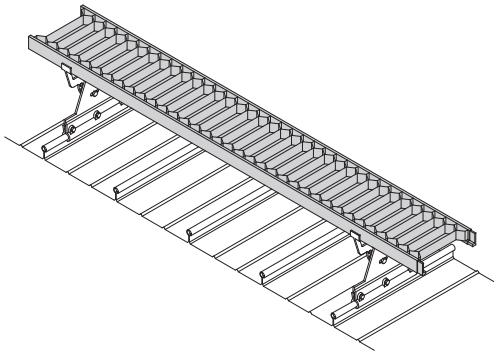

11.0

Bracket for aluminum access grid
for grids with width of 9-13⁄16" (25 cm)

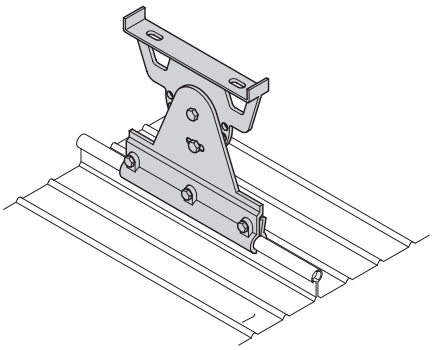

Fasteners

		Size in inches (mm)	Material
Composite clip for wood* without spacer cap (DK) TremLock K-Zip self-drilling screw SDK 2-S-377	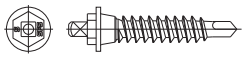	15/64" x 1-11⁄32" (6.0 x 35 mm)	stainless steel
TremLock K-Zip self-drilling screw SDK 2-S-377 TremLock K-Zip self-drilling screw SDK 2-S-377	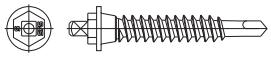	15/64" x 1-¾" (6.0 x 45 mm)	stainless steel
		15/64" x 2.36" (6.0 x 60 mm)	stainless steel
Self-drilling screw with Washer and seal 14 mm SW 2-S-A14	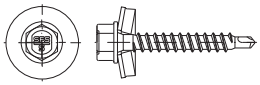	3/16" x 1-11⁄32" (4.8 x 35 mm)	stainless steel
Wood screw with washer and seal 16 mm TDA-S-S 16	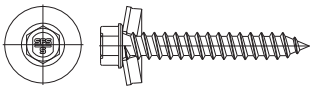	1/4" x 2" (6.5 x 51 mm)	stainless steel
Composite clip for steel trapezoidal sheet* without spacer cap (DK) TremLock K-Zip self-drilling screw SDK 2-S-377	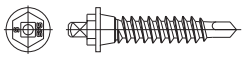	15/64" x 1-11⁄32" (6.0 x 35 mm)	stainless steel
TremLock K-Zip self-drilling screw SDK 2-S-377 TremLock K-Zip self-drilling screw SDK 2-S-377	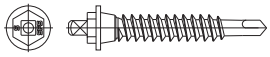	15/64" x 1-¾" (6.0 x 45 mm)	stainless steel
		15/64" x 2.36" (6.0 x 60 mm)	stainless steel
Bulbtite blind rivet Bulb-tite RV 6604-6	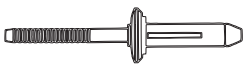	15/32" (12 mm) W	aluminum

*Screw length for fixing without spacer cap (DK).

Use the appropriate screaw length if spacer caps are used.

		Size in inches (mm)	Material
Composite clip for folded steel section* without spacer cap (DK) TremLock K-Zip self-drilling screw SDK 3-S-377	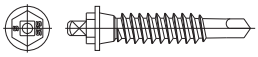	15/64" x 1-5/32" (6.0 x 30 mm)	stainless steel
TremLock K-Zip self-drilling screw SDK 3-S-377		15/64" x 1-3/4" (6.0 x 45 mm)	stainless steel
Composite clip for steel Thread forming screw with washer and seal 16 mm TDB-S-S16	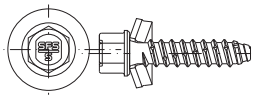	15/64" x 63/64" (6.3 x 25 mm)	stainless steel
TremLock K-Zip corrugated and trapezoidal profiles on wooden supporting constructions Drilling screw with washer and seal 14 mm SW 2-S-A14	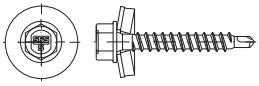	3/16" x 1-11/32" (4.8 x 35 mm)	stainless steel
TremLock K-Zip corrugated and trapezoidal profiles on metal supporting constructions Drilling screw with lower head grip Irius drive, washer and seal 12 mm, SX3/4-L/2-A12	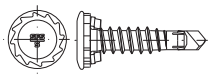	13/64" x 55/64" (5.5 x 22 mm)	stainless steel
Drilling screw with hexagonal head Washer and seal 16 mm SX3/4-S16	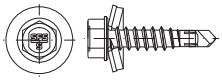	13/64" x 55/64" (5.5 x 22 mm)	stainless steel

*Screw length for fixing without spacer cap (DK). Use the appropriate screw length if spacer caps are used.

		Size in inches (mm)	Material
TremLock K-Zip corrugated and trapezoidal profiles on lightweight steel supporting constructions Thread forming screw with washer and seal 16 mm TDB-S-S16	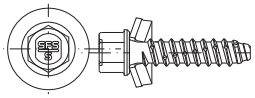	15/64" x 63/64" (6.3 x 25 mm)	stainless steel
Drilling screw with hexagonal head Washer and seal 16 mm SX3/4-S16	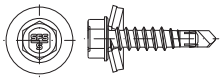	21" x 55/64" (5.5 x 22 mm)	stainless steel
Drilling screw with hexagonal head Washer and seal 16 mm SX3/10-S16	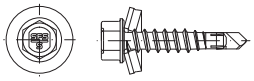	13/64" x 1-3/32" (5.5 x 28 mm)	Alu/Niro
Blind rivets Seal blind rivet ASC-D 48095		3/16" x 3/8" (4.8 x 9.8 mm)	Alu/Niro
Blind rivet K9 ASO-D 50080		3/16" x 5/16" (5.0 x 8.0 mm)	Alu/Niro
Blind rivet K9 ASO-D 50100		3/16" x 25/64" (4.8 x 10.0 mm)	Alu/Niro
Fixed point rivet K9.5 Gesipa Poly Grip			
TremLock K-Zip DuoPlus 100 DuoPlus 100 screw SD 2 - S 6.0 x 127		15/64" x 5" (6.0 x 127 mm)	stainless steel
DuoPlus 100 screw SD 2 - S 6.0 x 165		15/64" x 6-15/32" (6.0 x 165 mm)	stainless steel

tremcoroofing.com

The product and technical information contained in this document is accurate according to our knowledge at the time of publication. Details do not refer to any specific application and cannot give rise to any claim for compensation. From time to time our product range may alter as a result of our continued commitment to product innovation and development. Tremco CPG Inc. cannot guarantee that printed literature will contain the most recent updates; the latest editions are available to download at tremcoroofing.com.

Find your nearest Tremco Roofing sales representative at tremcoroofing.com/find-a-rep.

800.852.6013 | **tremcoroofing.com**

TREMCO
Roofing & Building Maintenance

L-0396 / 0926
© 2026 Tremco CPG Inc. All rights reserved. *All registered trademark symbols relate to a claim of registration in the United States.*