TREMLOCK INFINITY QUICKLOCK RADIUS COPING

TAPERED VERSION

IMPORTANT!!! MUST INDICATE PROPER RADIUS CONDITION BY CIRCLING APPROPRIATE OUTSIDE FACE

PROVIDING A RADIUS

THE RADIUS MAY BE PROVIDED IN ONE OF TWO METHODS:

1.) THE ACTUAL KNOWN RADIUS IS

_____' FEET _____" INCHES MINIMUM OF 3'-0"

OR

2.) FIELD CONDITION MEASUREMENTS

NOTE: REFER TO ATTACHED WORKSHEET FOR FURTHER INFORMATION

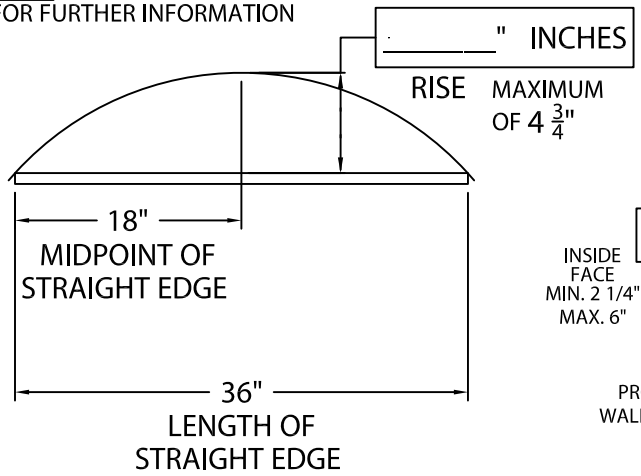

NOTE: CHECK MEASUREMENTS ALONG ENTIRE RADIUS.

DETAIL A

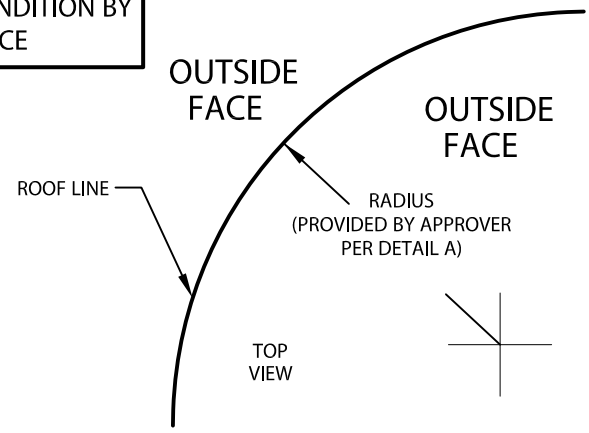

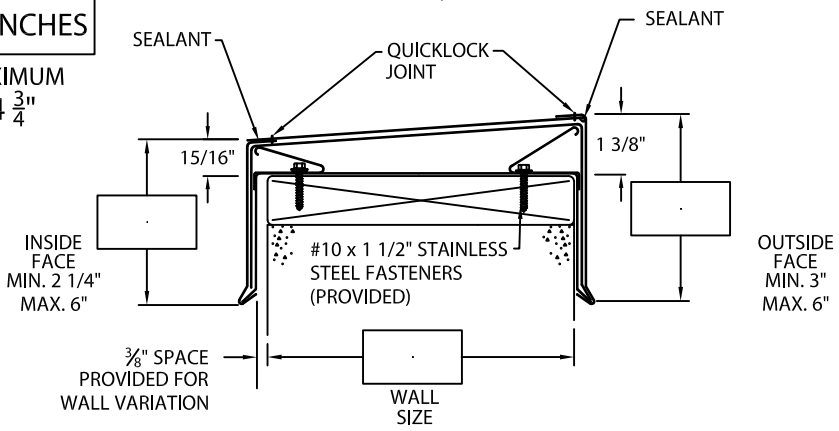

NOTES:
-- Concealed splice plates are provided with factory applied dual non-curing sealant strips.
-- Fabrication of radius is furnished utilizing a non-penetrating quicklock joint, then factory sealed watertight.

Fabrication will proceed only after receipt of signed print approval.

Print Approval:

Architect and/or contractor shall verify all dimensions, sizes and quantities. All products to be installed in strict accordance with Tremco's printed instructions.

Approved by:_____

Date:_____

MATERIAL:

- ☐ 24 Ga. Steel
- ☐ .040" Aluminum
- ☐ .050" Aluminum
- ☐ .063" Aluminum
- ☐ Other _____

Color: _____

Finish: _____

QUANTITIES:

_____Lineal Feet 4'-0" Lengths

PROJECT:

ARCHITECT:

ROOFING CONTRACTOR:

REPRESENTATIVE/DISTRIBUTOR:

TREMCO ROOFING AND BUILDING MAINTENANCE
3735 GREEN RD; BEACHWOOD, OH 44122
PHONE: 262-953-2666
EDGESYSTEMS@TREMCOINC.COM
WWW.TREMCOROOFING.COM

TREMCO ROOFING & BUILDING MAINTENANCE

DATE: 07/28/18

DRN BY: JJC

CKD BY: SAK

SHT.#____ OF ____

DWG# 60011-29371 A