TREMLOCK 215 EXT CANTED FASCIA

GALVANIZED WATERDAM VERSION

ANSI/SPRI ES-1 DESIGN PRESSURE OF 139 psf

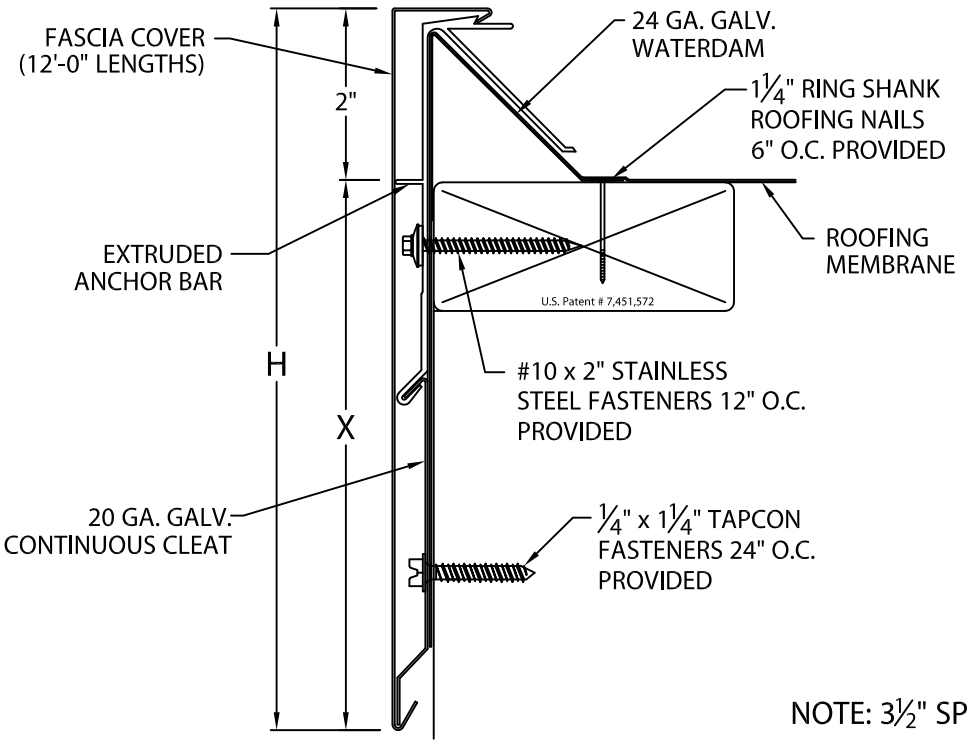

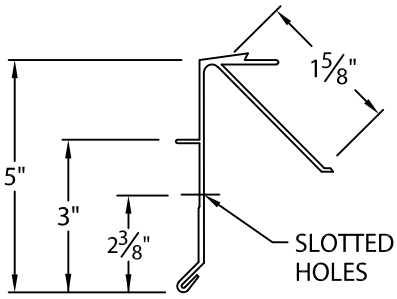

EXTRUDED PROFILE

NOTE: 3½" SPLICE PLATES PROVIDED AT ALL JOINTS

TREMLOCK 215 EXT CANTED FASCIA DIMENSIONS

PRODUCT ID. NO.	H DIM	X DIM
☐ AEFC-902	9"	7"
☐ AEFC-1052	10 1/2"	8 1/2"
☐ AEFC-1202	12"	10"
☐ AEFC-1352	13 1/2"	11 1/2"

MATERIAL:

☐ 22 GA. GALV. STEEL ☐ .063" ALUMINUM

☐ .050" ALUMINUM ☐ OTHER _____

COLOR:_____ FINISH:_____

Fabrication will proceed only after receipt of signed print approval.

Print Approval:

Architect and/or contractor shall verify all dimensions, sizes and quantities. All products to be installed in strict accordance with Tremco's printed instructions.

Approved by:_____

Date:_____

QUANTITIES:

_____ LINEAL FEET 12'-0" LENGTHS

_____ OUTSIDE MITERS @ 90°

_____ INSIDE MITERS @ 90°

_____ OVERFLOW SCUPPER(S) STYLE_____A_____B

_____ SPILLOUT SCUPPER(S) STYLE_____A_____B

_____ DOWNSPOUT SCUPPER(S) STYLE_____A_____B

(_____X_____) SIZE A: TAPERED 1 1/2" DROP
B: FLAT

FOR NON-90 MITERS SEE PRINT APPROVAL #60010-29179

PROJECT:

ARCHITECT:

ROOFING CONTRACTOR:

REPRESENTATIVE/DISTRIBUTOR:

TREMCO ROOFING AND BUILDING MAINTENANCE
3735 GREEN RD; BEACHWOOD, OH 44122
PHONE: 800-558-2162
EDGESYSTEMS@TREMCOINC.COM
WWW.TREMCOROOFING.COM

TREMCO ROOFING & BUILDING MAINTENANCE

DATE: 07/18/18

DRN BY: JJC

CKD BY: SAK

SHT.#____ OF ____

DWG# 60010-29231 A