TREMLOCK 215 EXT FASCIA SINGLE-PLY

FULLY ADHERED OR MECHANICALLY ATTACHED SINGLE-PLY VERSION

ANSI/SPRI ES-1 DESIGN PRESSURE OF 176 psf

FM APPROVED

MIAMI-DADE COUNTY
NOA No. 13-0419.03 12/11/18
Miami-Dade County, Florida

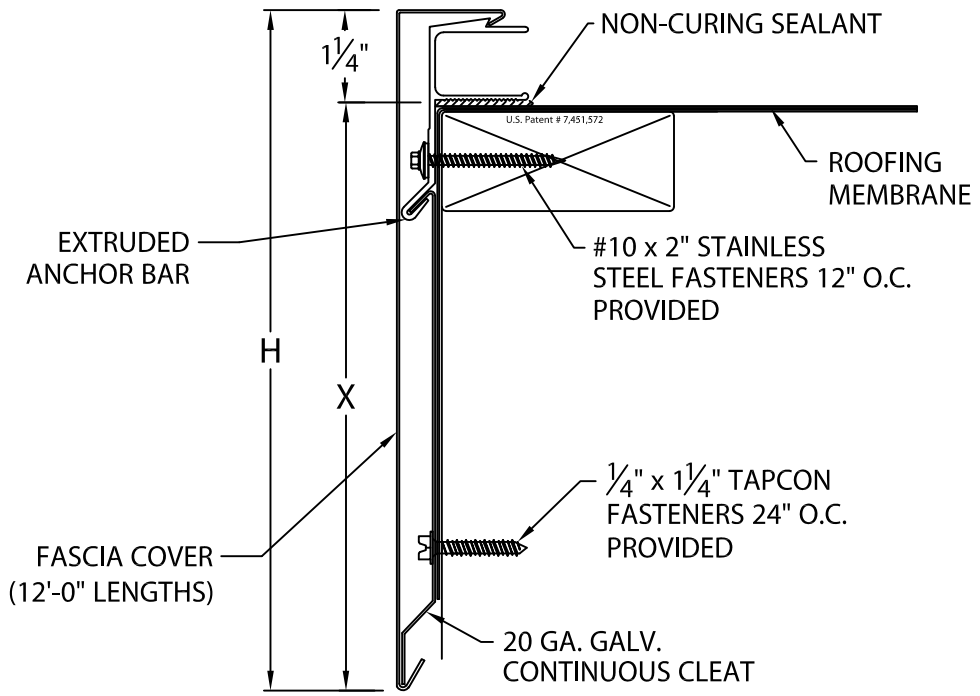

NOTE: 3½" SPLICE PLATES PROVIDED AT ALL JOINTS

TREMLOCK 215 EXT FASCIA SINGLE-PLY DIMENSIONS

PRODUCT ID. NO.	H DIM	X DIM
☐ AEF-85	8 1/2"	7 1/4"
☐ AEF-100	10"	8 3/4"
☐ AEF-115	11 1/2"	10 1/4"
☐ AEF-130	13"	11 3/4"

MATERIAL:

☐ 22 GA. GALV. STEEL ☐ .063" ALUMINUM

☐ .050" ALUMINUM ☐ OTHER _____

COLOR:_____ FINISH:_____

Fabrication will proceed only after receipt of signed print approval.

Print Approval:

Architect and/or contractor shall verify all dimensions, sizes and quantities. All products to be installed in strict accordance with Tremco's printed instructions.

Approved by:_____

Date:_____

QUANTITIES:

_____ LINEAL FEET 12'-0" LENGTHS

_____ OUTSIDE MITER(S) @ 90°

_____ INSIDE MITER(S) @ 90°

_____ OVERFLOW SCUPPER(S) STYLE_____A_____B

_____ SPILLOUT SCUPPER(S) STYLE_____A_____B

_____ DOWNSPOUT SCUPPER(S) STYLE_____A_____B

(_____X_____) SIZE A: TAPERED 1 1/2" DROP
B: FLAT

FOR NON-90 MITERS SEE PRINT APPROVAL #60010-29179

PROJECT:

ARCHITECT:

ROOFING CONTRACTOR:

REPRESENTATIVE/DISTRIBUTOR:

TREMCO ROOFING AND BUILDING MAINTENANCE
3735 GREEN RD; BEACHWOOD, OH 44122
PHONE: 800-558-2162
EDGESYSTEMS@TREMCOINC.COM
WWW.TREMCOROOFING.COM

TREMCO ROOFING & BUILDING MAINTENANCE

DATE: 07/18/18 SHT.#____ OF ____

DRN BY: JJC

CKD BY: SAK DWG# 60010-29227 A